CD Stereo Radio Recorder

AZ1407/00/05/17

AZ1508/00/01/05/14/17

Service
Service
Service

Service Manual

COMPACT disc DIGITAL AUDIO

TABLE OF CONTENTS

	chapter
Location of printed circuit boards	2-1
Technical Specification	2-1, 2-2
Measurement setup	2-3
Connections & Controls	2-4
Brief Operating Instructions	2-5 to 2-10
Warnings & Safety	2-11
Dismantling Instructions	3-1 to 3-3
Service hints	3-4 to 3-6
Service Test Program	3-7
WIRING DIAGRAM	5-1
FRONT BOARD	
schematic diagram	6-1
component layout	6-2
TUNER BOARD	
schematic diagram	7-1
component layout	7-2
adjustment table tuner	7-2
AUDIO BOARD	
component layout	8-1
schematic diagram AZ1508	8-2
schematic diagram AZ1407	8-3
RECORDER MODULE	9-1 to 9-4
exploded views	9-1
schematic diagram	9-2
component layout	9-3
electrical partslist	9-4
CD MODULE	
table of contents	10-1
disassembly drawings	10-2 to 10-4
functional diagram, abbreviations	10-5
CD board component layout	10-6
schematic diagram	10-7
faultfinding tree	10-8
explode view	10-9
partslist	10-10
EXPLODED VIEWS	
apparatus, drawing 1	11-1
apparatus, drawing 2	11-2
MECHANICAL PARTSLIST see Exploded views	
ELECTRICAL PARTSLIST	12-1 ff

CLASS 1 LASER PRODUCT

Published by Philips Consumer Electronics Printed in The Netherlands

Copyright reserved Subject to modification

GB 4822 725 24975

CS 48 869

PHILIPS

PHILIPS

LOCATION OF PRINTED BOARDS

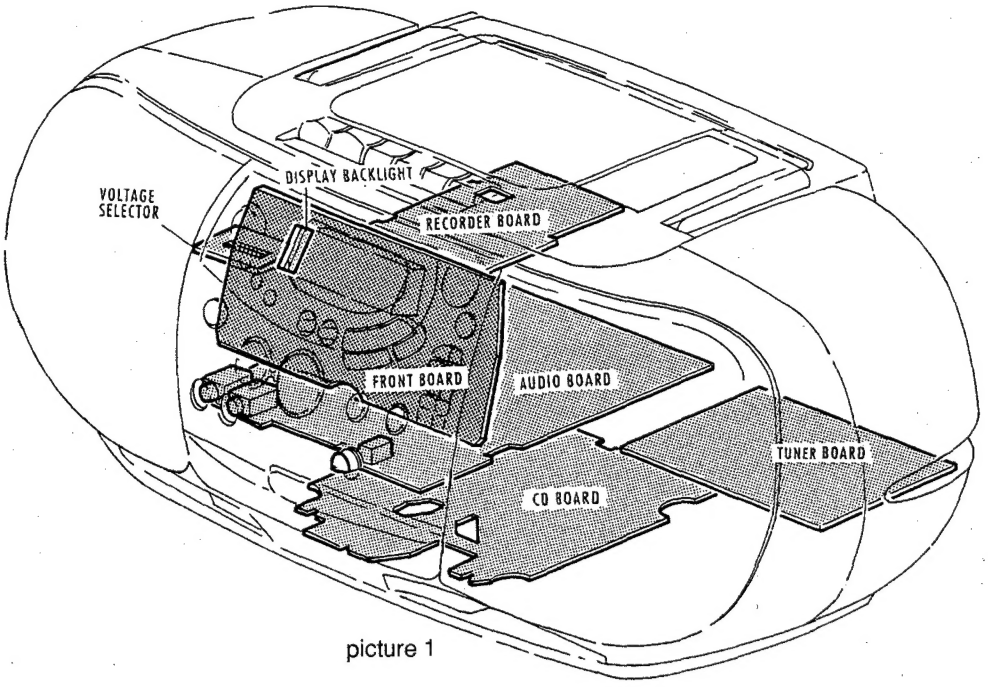

picture 1

TECHNICAL SPECIFICATION

General:

Mains voltage	:	220V-230V / 50Hz for /00 /14 230V-240V / 50Hz for /05 /10 110V-127V / 220V-240V /50Hz switchable for /01/11/13 120V / 60Hz for /17 100V / 50Hz for /06
Power consumption	:	≤ 35W at maximum output power ≤ 5W in stand by
Battery	:	9V (6xR20)
Battery lifetime	:	12 hours typ.

Amplifier:

Power stage protection : temperature and shortcircuit

		AZ1407	AZ1508
Output power mains	:	2 x 1.6Wrms -1dB at 4Ω D=10%	2 x 3.2Wrms -1dB at 8Ω D=10%
battery	:	2 x 2Wrms -1dB at 4Ω D=10%	2 x 3.9Wrms -1dB at 8Ω D=10%

Headphone : 3,5mm stereo jack, ≥ 20mW at 32Ω (≡ 0,8V at 32Ω) D=10%

Frequency response : 30Hz - 16kHz (typ. at volume set to -20dB, CD mode 0dB signal level ⇒use SBC429)

Digital Sound Control *DSC*

		100Hz	**10kHz**
Flat	:	-2dB ±3dB	0dB ±3dB
Pop	:	+7dB ±3dB	+8dB ±3dB
Jazz	:	+3dB±3dB	+5dB ±3dB
DBB	:	+7dB ±3dB	+4dB ±3dB

CD:

To be measured on phone socket with 100kΩ load.

Frequency response	:	30 - 16.000 Hz -3dB
Signal/Noise ratio	:	≥ 80dB
Distortion	:	≤ 0.3% at 1 kHz
Channel difference	:	≤ 3dB at 1 kHz
Channel crosstalk	:	35dB max.
De emphasis	:	0 or 15/50µs switched automatically by subcode on the disc

Laser

Output power	:	500µW
Wave length	:	780 ±20nm

Tuner:

	FM	MW	LW[1]
Tuning range	87,5 - 108 MHz (65.81 - 74/87.5 - 108 MHz for /14) (76 - 90 MHz + Ch1 95.75MHz, Ch2 95.75 MHz, Ch3 107.75 MHz for /06)	531 - 1602 kHz (530 - 1700 kHz for /01/17)	153- 279 kHz
IF	10,7 MHz ± 30 kHz	450kHz ± 1 kHz	450 kHz ± 1 kHz
Sensitivity Mono: 26dB S/N, m=30%	≤ 5 µV (2µV typ.)	≤ 4mV/m (3,5mV/m typ.)	≤ 6mV/m (4,5mV/m typ.)
-3 dB limiting point	≤ 5 µV (2µV typ.)		
Frequency grid	50 kHz (30/50 kHz for /14) (100 kHz for /06/17) (50/100 kHz* for /01/11) * can be selected via software initialization	9 kHz (10 kHz for /17) (9/10 kHz* for /01/11)	3 kHz
Distortion	≤ 3% (≤ 1% typ.) RF=1mV Δf=75kHz	≤ 5% (3% typ.) RF=50mV/m m=80%	≤ 5% (3% typ.) RF=50mV/m m=80%
Image rejection ratio	≥ 25dB (40dB typ.)	≥ 28dB	≥ 30dB
Channel separation at 1kHz	≥ 22dB (27dB typ.)		

1) not in all versions

Recorder:

To be measured on phone socket with 100kΩ load.

Tape speed	: 4,76cm/s ±3%
Wow & Flutter	: ≤ 0,5% weighted
Winding speed	: 110s for C60 cassette
Erase / Bias system	: permanent magnetic erase head / AC 73 ±1.5kHz
Distortion at 250 nWb/m	: ≤ 7%
Signal/Noise ratio (FF weighted)	: ≥ 40dB
(A - weighted)	: ≥ 43dB
Channel difference at PB	: ≤ 3dB
Channel difference overall	: ≤ 5dB
Channel separation	: ≥ 15dB at 1kHz
Track separation	: ≥ 55dB at 1kHz

note: set is not prepared to play or record *IEC II Chrome* cassettes!

Frequency response IEC I

PB	: 125Hz - 8000Hz (within 8dB)
overall	: 250Hz - 6300Hz (within 8dB)

Remote Control:

Remote Control key	RC5 commands ***RC0206*** System Code *CD*	*Tuner*	Command Code	RC5 commands ***Rc0170*** System Code	Command Code
PLAY/PAUSE	20		53	20	53
STOP	20		54	20	54
NEXT (PRESET UP)	20		32	20	32
PREVIOUS (PRESET DOWN)	20		33	20	33
VOLUME UP	16	16	16	16	16
VOLUME DOWN	16	16	17	16	17
OPEN/CLOSE	20	20	45	20	45
CD mode	20		63		
TUNER mode		17	63		
SHUFFLE	20		28		
1	20	17	01		
2	20	17	02		
3	20	17	03		
4	20	17	04		
5	20	17	05		
6	20	17	06		
7	20	17	07		
8	20	17	08		
9	20	17	09		
0	20	17	00		
DISC UP	not used				

MEASUREMENT SETUP

Tuner FM

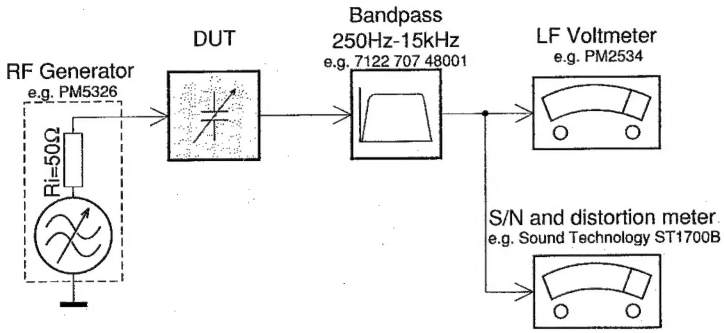

Use a bandpass filter to eliminate hum (50Hz, 100Hz) and disturbance from the pilottone (19kHz, 38kHz).

Tuner AM (MW,LW)

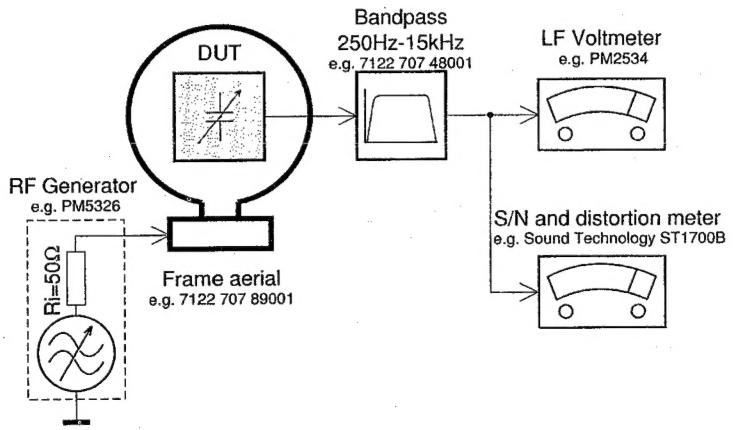

To avoid atmospheric interference all AM-measurements have to be carried out in a Faraday´s cage.
Use a bandpass filter (or at least a high pass filter with 250Hz) to eliminate hum (50Hz, 100Hz).

CD

Use Audio Signal Disc SBC429 4822 397 30184
(replaces test disc 3)

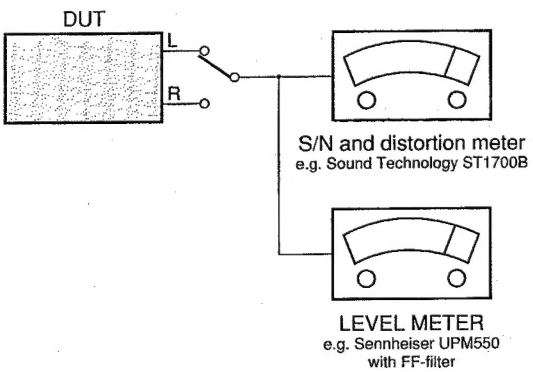

RECORDER

Use Universal Test Cassette **Fe** SBC420 4822 397 30071

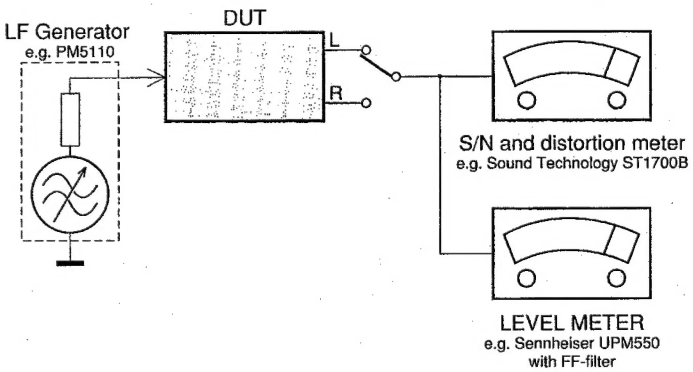

CONNECTIONS & CONTROLS

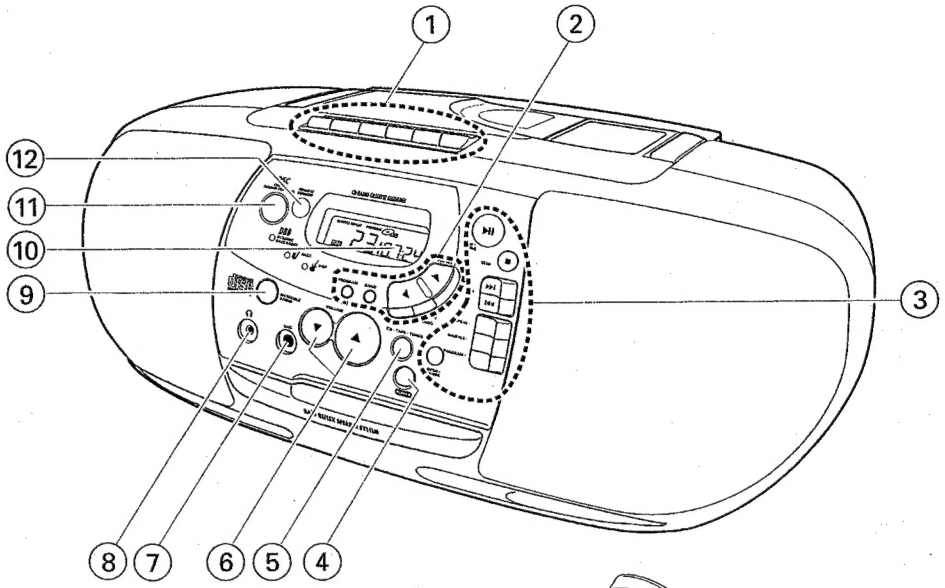

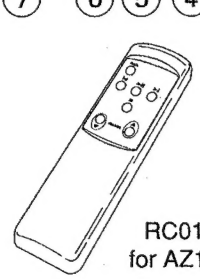

RC0170
for AZ1407

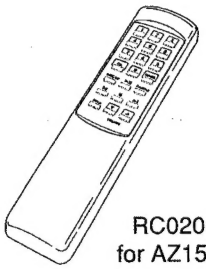

RC0206
for AZ1508

CONTROLS

English

① CASSETTE RECORDER:

RECORD ● .....to start recording
PLAY ▶ .....to start playback
SEARCH ◀◀ .....to rewind the tape
SEARCH ▶▶ .....to wind the tape
STOP·OPEN ■ ▲ .to stop the tape and to open the cassette compartment
PAUSE ❚❚ .....to interrupt recording or playback

② TUNER:

PROGRAM .....to program preset stations
TUNING ⏮ ⏭....to tune to radio stations
BAND.....to select the wave band (FM·MW·LW·AM·SW)
PRESET ◀ ▶.....to select a preset station

③ CD PLAYER:

OPEN·CLOSE ▲ ....to open/close the CD tray
PLAY·PAUSE ▶❚❚...to start and to interrupt CD play
STOP ■.....to stop CD play and to erase a program
SEARCH ⏮ ⏭....to skip and to search forward and backward
SHUFFLE .....to play in random order
PROGRAM .....to program track numbers and to review the program
REPEAT .....to repeat one track or the entire CD or program

BASIC FUNCTIONS:

④ POWER .....to turn the set on and off
⑤ CD·TAPE·TUNER ...to select the sound source
⑥ VOLUME .....to adjust the volume level
⑦ MIC .....3.5 mm microphone socket
⑧ 🎧.....3.5 mm headphone socket
Note: Inserting the plug will disconnect the speakers.
⑨ INCREDIBLE SOUND **AZ1508 ONLY**
to create a phenomenal surround sound effect
⑩ Display.....Window for showing different playing modes
⑪ DSC.....**D**IGITAL **S**OUND **C**ONTROL
to enhance the type of music you are listening to
DBB·JAZZ·POP
⑫ REMOTE SENSOR ..sensor for the infrared remote control

REMOTE CONTROL: RC0170

OPEN.....to open/close the CD tray
▶❚❚.....to start and to interrupt CD play
⏮ ⏭.....CD: to select the beginning of the current/previous or a subsequent track
TUNER: to select a preset station
■.....to stop CD play
VOLUME ▼ ▲ .....to decrease or increase the volume level

RC0206: see next page

Switching on and off/standby

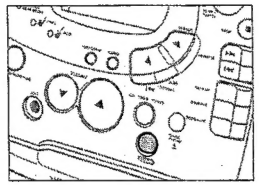

Push the POWER button.
→ The display lights up. If the set runs from batteries the display will not be back-lit.

The set is switched off when the POWER button is released.

In order to switch off the power supply, remove the mains plug.

Note: If you run the set from batteries, always be sure to switch the set off after use. This will avoid unnecessary power consumption.

Adjusting volume and sound

Adjust the volume using the control VOLUME MIN-MAX.
Adjust the volume using the controls VOLUME ▼▲.
→ Display indication: Volume level from 0 to 32.

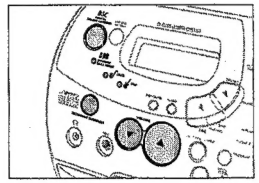

Adjust the sound to suit your taste by pressing the button DSC several times (DBB is **D**ynamic **B**ass **B**oost).
→ A light indicates either DBB-JAZZ-POP.

Create a phenomenal surround sound effect by pressing INCREDIBLE SURROUND.
→ The INCREDIBLE SURROUND button lights up.

Do not cover any vents and leave sufficient room around the unit for ventilation.

Note: The effect of INCREDIBLE SURROUND may vary with different types of music.

Remote control RC0206

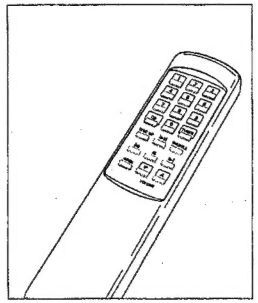

CD .....to select CD functions
TUNER .....to select tuner functions
Digits 0-9.....CD: to key in a track number
TUNER: to key in a preset station
▶II .....to start and to interrupt CD play
SHUFFLE .....to play a CD in random order
⏮ ⏭.....CD: to select the beginning of the current/previous or a subsequent track
TUNER: to select a radio preset station
■.....to stop CD play
OPEN.....to open/close the CD tray
VOLUME ▼ ▲.....to decrease or increase the volume level

Notes: – Always select the desired sound source first and then press the required function key.
– Numbers consisting of two figures must be keyed in within 2 seconds.
– DISC UP has no function with this set.

Batteries

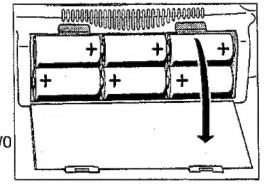

For the set (optional):
Open the battery compartment of the set and insert six batteries, type **R20**, **UM1** or **D-cells** (preferably alkaline).

For the remote control (supplied):
Open the battery compartment of the remote control and insert two batteries, type **R06**, **UM3** or **AA-cells** (preferably alkaline).

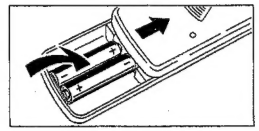

Remove the batteries if they are flat or the set is not going to be used for a long time.

Batteries contain chemical substances, therefore they should be disposed of properly.

Mains

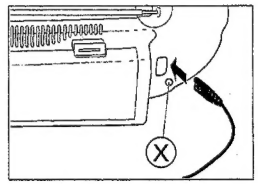

1 Check whether the mains voltage as shown on the type plate corresponds to your local mains voltage. If it does not, consult your dealer or service organisation. ***The type plate is located on the base of the set.***

If the set is equipped with a VOLTAGE selector ⓧ, set this selector to the local mains voltage.

2 Connect the mains cable to the AC MAINS inlet and the wall socket. This switches on the mains supply. ***The mains cable is inside the battery compartment.***

The battery supply will be switched off when the set is connected to the mains. To change over to battery supply, pull out the plug from the unit's AC MAINS socket.

To disconnect the set from the mains completely, remove the mains plug from the wall socket.

For users in the U.K.: please follow the instructions on page 2.

To avoid overheating of the set a safety circuit has been built in. Therefore your set may switch off under extreme conditions. If this happens, release the POWER button and let the set cool down before reusing it.

TUNER

English

Tuning to radio stations

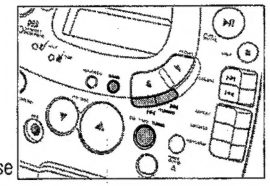

1 Select the tuner by pressing the CD·TAPE·TUNER button several times until **TUNER** appears on the display.

2 Select the wave band by using the BAND selector.
→ Display indication: the selected waveband.

3 Press TUNING ⏮ or ⏭ for approx. one second and then release the button.
→ The radio automatically tunes to a station with sufficient strength. Display indication during automatic tuning: Srch

4 Repeat this procedure until you find a station you desire.

To tune to a weak transmitter briefly press TUNING ⏮ or ⏭ as often as necessary for optimum reception, or until the correct frequency is indicated in the display.

Improving RADIO reception
For **FM** and **SW** (SW waveband is not applicable on all versions.) pull out the telescopic antenna. To improve the signal, incline and turn the antenna. Reduce its length if the signal is too strong (very close to a transmitter).

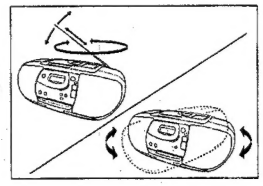

For **AM**, **MW** and **LW**, direct the built-in antenna by turning the whole set. The telescopic antenna is not needed.

Switchable tuning grid (not on all versions)
In some versions the frequency steps can be changed. Usually the frequency step for your area has been preset in the factory.

Keep the BAND selector button pressed for more than 5 seconds.
→ The display shows either 10 Grid or 9 Grid.

Programming radio stations (29 preset stations)

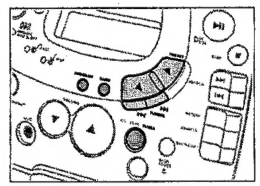

You can store up to 29 radio stations in the memory. When tuning to a preset station, the preset number (1 to 29) is indicated in the display.

1 Select the tuner by pressing the CD·TAPE·TUNER button several times until **TUNER** appears on the display.

2 Tune to a desired station with TUNING ⏮ or ⏭, as described earlier.
→ If the frequency is already stored in the memory, the preset number will be displayed.

3 Press PROGRAM to enter the programming mode.
→ During programming, **PROGRAM** flashes on the display.

4 Press PRESET ◀ or ▶ to allocate a number from 1 to 29 to the preset station.

5 Press PROGRAM to confirm the setting.

Tuning to preset stations
Press PRESET ◀ or ▶ until the desired preset number appears on the display.

Environmental information

All redundant packing material has been omitted. We have done our outmost to make the packaging easy seperable into three mono materials: cardboard (box), polystyrene foam (buffer) and polyethylene (bags, protective foam sheet).

Your set consists of material which can be recycled if disassembled by a specialized company. Please observe the local regulations regarding the disposal of packing materials, exhausted batteries and old equipment.

CD PLAYER

English

Playing a CD

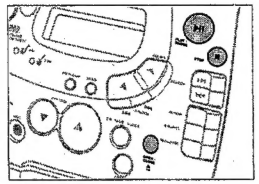

1 Select the CD player by pressing the CD·TAPE·TUNER button several times until CD appears on the display.

2 Open the tray by pressing the OPEN·CLOSE ▲ button.

3 Insert an audio CD (printed side up) and close the tray by pushing it gently or pressing the OPEN·CLOSE ▲ button again.
→ The CD player starts and scans the contents list of the CD. Display indication: the total number of tracks and the total playing time. After that the CD player stops.

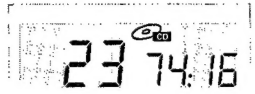

4 Press the PLAY·PAUSE ▶II button to start CD play.
→ Display indication: the current track number and the elapsed time of the current track.

5 Press the STOP ■ button to stop CD play.
→ Display indication: the total number of tracks and the total playing time.

You can interrupt CD play by pressing PLAY·PAUSE ▶II.
Continue CD play by pressing the button again.
→ Display indication: the time where playback was stopped flashes.

Notes: CD play will also stop if:
– you open the tray;
– you push the POWER button or
– the end of the CD is reached.

If you make a mistake operating the CD player, or the CD player cannot read the CD, the display indicates *Error* (see TROUBLESHOOTING).

Search backward ⏮ and ⏭ forward

Selecting another track

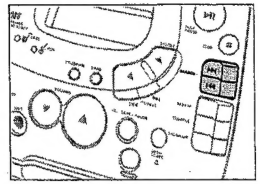

Briefly press the SEARCH ⏮ or ⏭ button once/several times to skip to the beginning of the current/previous or subsequent track(s).
During play:
CD play continues automatically with the selected track.
From stop position:
press PLAY·PAUSE ▶II to start CD play.
→ Display indication: the selected track number.

Searching for a passage during CD play

1 Hold down the SEARCH ⏮ or ⏭ button to find a particular passage in a forward or backward direction.
→ CD play continues at a low volume.

2 Release the button when you have reached the desired passage.

Note: In the SHUFFLE and REPEAT modes and when playing a program, searching is only possible within a particular track.

Different playing modes: SHUFFLE / REPEAT

SHUFFLE – playing in random order

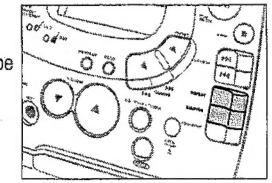

1 Press SHUFFLE before or during CD play.
→ All the tracks of the CD (or program if available) will now be played in random order.

2 To return to normal CD play, press SHUFFLE again.

REPEAT – Repeating the entire CD or one track of the CD

1 Before or during CD play, press repeated REPEAT to cause the display to show the different repeating modes.
→ **REPEAT**: the current track is played repeatedly.
→ **REPEAT ALL**: the entire CD or program is played repeatedly.

2 To return to normal CD play press REPEAT until the display indication disappears.

*Note: You can activate the different playing modes at the same time, e. g. you can repeatedly play the entire CD or program in random order (***SHUFFLE REPEAT ALL***).*

English English

Programming track numbers

You can select a number of tracks and store these in the memory in the desired sequence. You can store any track more than once. At most, 20 tracks can be stored in the memory.

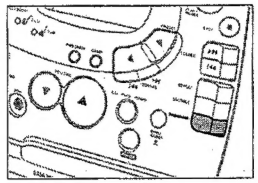

1 Select the desired track with SEARCH ⏮ or ⏭.

2 As soon as the desired track is displayed, press the PROGRAM button to store the track in the memory.
→ **PROGRAM** appears in the display. The number of the stored track, Pr and the total number of stored tracks is shown.

3 Select and store all desired tracks in this way.

You can review your settings by pressing the PROGRAM button for more than 2 seconds.
→ The display shows all stored track numbers in sequence.

Notes: – If you try to store more than 20 tracks, the display shows FULL.

– If you press PROGRAM and there is no track selected the display shows SELECt.

Playing the program

If you have selected the tracks in the stop position, press PLAY·PAUSE ▶II.

If you have selected the tracks during CD play, first press STOP ■ and then press PLAY·PAUSE ▶II.

Erasing the program from the stop position

From the stop position, press STOP ■.
→ CLEAr lights up briefly, **PROGRAM** disappears and your program is erased.

Notes: The program will also be erased if you
– interrupt the power supply,
– open the tray, or
– press the POWER button.

Playing a cassette

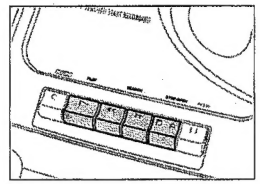

1 Select the tape by pressing the CD·TAPE·TUNER button several times until TAPE appears on the display.

2 Press STOP·OPEN ■ ▲ to open the cassette compartment.

3 Insert a recorded cassette with the open side facing the front.

4 Close the cassette compartment by pushing it down.

5 Press PLAY ▶ to start playback.

6 By pressing ◀◀ or ▶▶ fast winding of the tape is possible in both directions.

7 To stop the tape press STOP·OPEN ■ ▲.

Notes: – The keys are automatically released at the end of the tape.
– If PLAY ▶ or RECORD ● are depressed, you can not switch to another sound source.

General information on recording

Recording is permissible insofar as copyright or other rights of third parties are not infringed upon.

For recording on this set you should use a cassette of the type NORMAL (IEC type I). This deck is not suitable for recording on cassettes of the type CHROME (IEC type II) or METAL (IEC type IV).

The recording level is set automatically. The controls VOLUME, DSC, DBB and INCREDIBLE SURROUND do not affect the recording.

At the very beginning and end of the tape, no recording will take place in the 7 seconds during which the leader tape passes the recorder heads.

Protecting tapes from accidental erasure
Keep the cassette side to be protected in front of you and snap off the left tab. Now, recording on this side is no longer possible.

To record again on this side of the cassette, cover the aperture with a piece of adhesive tape.

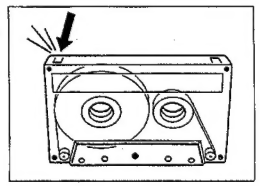

Recording from the CD player – CD synchro start

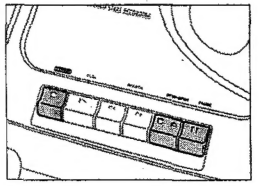

1 Select the CD by pressing the CD·TAPE·TUNER button several times until CD appears on the display.

2 Insert a CD and, if desired, program track numbers.

3 Press STOP·OPEN ■ ▲ to open the cassette compartment.

4 Insert a blank cassette with the open side facing the front.

5 Close the cassette compartment by pushing it down.

6 Press RECORD ● to start recording.
→ Playing of the CD or program starts automatically. It is not necessary to start the CD player separately.

7 For brief interruptions, press PAUSE ❚❚. To resume recording, press the PAUSE ❚❚ key again.

8 To stop recording, press STOP·OPEN ■ ▲.

Notes: the recording can be started from different positions:
– if the CD player is in the Pause mode, recording will start from this very position (use SEARCH ⏮ or ⏭);
– if the CD player is in the Stop mode, recording will start from the beginning of the CD or program.

Recording from the radio or with the microphone

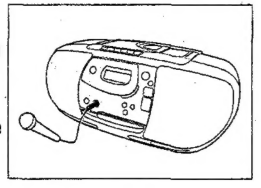

1 (Selecting and preparing the source)

RADIO: Select the radio by pressing the CD·TAPE·TUNER button several times until TUNER appears on the display.
MICROPHONE: Select the tape by pressing the CD·TAPE·TUNER button several times until TAPE appears on the display. Connect a microphone with a 3.5 mm plug to the MIC socket and set the VOLUME control to zero (monitoring during microphone recording is not possible).

2 Press STOP·OPEN ■ ▲ to open the cassette compartment.

3 Insert an unprotected blank cassette with the open side facing the front.

4 Press RECORD ● to start recording.

5 For brief interruptions press PAUSE ❚❚. To resume recording press the PAUSE ❚❚ key again.

6 To stop recording, press STOP·OPEN ■ ▲.

Note: When recording from the radio or a CD, you can connect a microphone and mix the sounds. Otherwise, be sure there is no microphone connected that could disturb your recording.

English

General maintenance

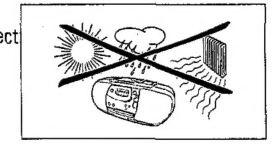

Do not expose the set, batteries, CDs or tapes to humidity, rain, sand or excessive heat (caused by heating equipment or direct sunlight).

The mechanical parts of the set contain self-lubricating bearings and must not be oiled or lubricated!

You can clean the set with a soft, slightly dampened chamois cloth. Do not use any cleaning agents as they may have a corrosive effect.

Tape deck maintenance

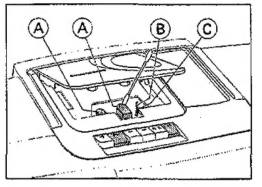

To ensure proper recording and playback quality, clean the parts ⒶⒷⒸ after approx. 50 hours of operation. Use a cotton bud slightly moistened with alcohol or a special head-cleaner fluid.

Press PLAY ▶ and clean the rubber pressure rollers Ⓒ.

Press PAUSE ❚❚ and clean the capstans Ⓑ and the heads Ⓐ.

Note: Cleaning of the heads Ⓐ can also be done by playing a cleaning tape once.

CD player and CD handling

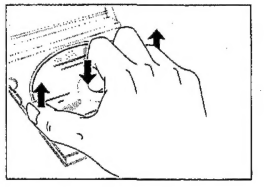

The lens may cloud over when the set is suddenly moved from cold to warm surroundings. Playing a CD is not possible at such times. Leave the CD player in a warm environment until the moisture evaporates.

To take the CD out of its box easily, press the centre spindle while lifting the CD.

Always pick up the CD by the edge and put it back in its box after use.

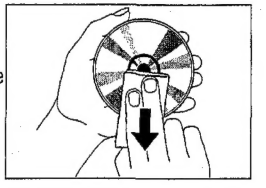

To clean the CD, wipe it in a straight line from the center toward the edge using a soft, lint-free cloth. A cleaning agent may damage the disc!

Never write on a CD or attach a sticker to it.

This set complies with the radio interference requirements of the European Community

TROUBLESHOOTING

WARNING

Under no circumstances should you try to repair the set yourself, as this will invalidate the guarantee.

If a fault occurs, first check the points listed below before taking the set for repair.

If you are unable to remedy a problem by following these hints, consult your dealer or service center.

PROBLEM	POSSIBLE CAUSE	REMEDY
No sound / no power	VOLUME is not adjusted	Adjust the VOLUME
	Headphone is connected	Disconnect headphone
	Mains cable is not securely connected	Connect the mains cable properly
	Batteries are flat	Replace batteries
	Batteries are incorrectly inserted	Insert the batteries correctly
	Changing over from mains to battery supply without removing the plug	Pull out the mains plug from the unit's AC MAINS inlet
No reaction to operation of any keys	Electrostatic discharge	Disconnect the set from power supply reconnect it after a few seconds
Poor radio reception	Weak radio aerial signal	Aim the aerial for optimum reception: – FM/SW: incline and rotate telescopic antenna – AM/MW/LW: rotate the entire set
	Interference caused by the vicinity of electrical equipment like TVs, video recorders, computers, engines, etc.	Keep the radio away from electrical equipment
no d SC **or** Error **indication**	The CD is badly scratched or dirty	Replace or clean the CD, see maintenance
	No CD is inserted	Insert a CD
	The CD is inserted upside down	Insert a CD with label upwards
	The laser lens is steamed up	Wait until the lens has cleared
The CD skips tracks	The CD is damaged or dirty	Replace or clean the CD
	SHUFFLE or **PROGRAM** is active	Switch off shuffle or program play
Poor cassette sound quality	Dust and dirt on the heads, capstan or pressure roller	Clean the heads, capstan and pressure roller, see MAINTENANCE
	Use of unsuitable cassette types (METAL or CHROME)	Only use NORMAL cassettes for recording
Recording does not work	Cassette tab(s) may be snapped off	Apply a piece of adhesive tape over the missing tab space
Remote control does not function properly	Batteries are incorrectly inserted	Insert the batteries correctly
	Batteries are flat	Replace batteries
	Distance to the set is too large	Reduce the distance

WARNINGS & SAFETY

(GB) WARNING
All ICs and many other semiconductors are susceptible to electrostatic discharges (ESD). Careless handling during repair can reduce life drastically.
When repairing, make sure that you are connected with the same potential as the mass of the set via a wrist wrap with resistance. Keep components and tools at this potential.

(F) ATTENTION
Tous les IC et beaucoup d´autres semi-conducteurs sont sensibles aux décharges statiques (ESD). Leur longévite pourrait être considérablement écourtée par le fait qu´aucune précaution nést prise à leur manipulation.
Lors de réparations, s´assurer de bien être relié au même potentiel que la masse de l´appareil et enfileer le bracelet serti d´une résistance de sécurité.
Veiller à ce que les composants ainsi que les outils que l´on utilise soient également à ce potentiel.

ESD

(D) WARNUNG
Alle ICs und viele andere Halbleiter sind empfindlich gegenüber elektrostatischen Entladungen (ESD).
Unsorgfältige Behandlung im Reparaturfall kann die Lebensdauer drastisch reduzieren.
Sorgen Sie dafür, daß sie im Reparaturfall über ein Pulsarmband mit Widerstand mit dem Massepotential des Gerätes verbunden sind.
Halten Sie Bauteile und Hilfsmittel ebenfalls auf diesem Potential.

(NL) WAARSCHUWING
Alle IC´s en vele andere halfgeleiders zijn gevoelig voor electrostatische ontladingen (ESD).
Onzorgvuldig behandelen tijdens reparatie kan de levensduur drastisch doen vermindern. Zorg ervoor dat u tijdens reparatie via een polsband met weerstand verbonden bent met hetzelfde potentiaal als de massa van het apparaat.
Houd componenten en hulpmiddelen ook op ditzelfde potentiaal.

(I) AVVERTIMENTO
Tutti IC e parecchi semi-conduttori sono sensibili alle scariche statiche (ESD).
La loro longevità potrebbe essere fortemente ridatta in caso di non osservazione della più grande cauzione alla loro manipolazione. Durante le riparationi occorre quindi essere collegato allo stesso potenziale che quello della massa delápparecchio tramite un braccialetto a resistenza.
Assicurarsi che i componenti e anche gli utensili con quali si lavora siano anche a questo potenziale.

(GB)
Safety regulations require that the set be restored to its original condition and that parts which are identical with those specified be used.
Safety components are marked by the symbol ⚠

(F)
Les normes de sécurité exigent que l`appareil soit remis à l`état d`origine et que soient utilisées les pièces de rechange identiques à celles spécifiées.
Les composants de sécurité sont marqués ⚠

SAFETY

(D)
Bei jeder Reparatur sind die geltenden Sicherheitsvorschriften zu beachten. Der Originalzustand des Gerätes darf nicht verändert werden. Für Reparaturen sind Originalersatzteile zu verwenden.
Sicherheitsbauteile sind durch das Symbol ⚠ markiert.

(NL)
Veiligheidsbepalingen vereisen, dat het apparaat in zijn oorspronkelijke toestand wordt teruggebracht en dat onderdelen, identiek aan de gespecificeerde, worden toegepast.
De Veiligheidsonderdelen zijn aangeduid met het symbool ⚠

(I)
Le norme di sicurezza estigono che l´apparecchio venga rimesso nelle condizioni originali e che siano utilizzati i pezzi di ricambiago identici a quelli specificati.
Componenty di sicurezza sono marcati con ⚠

(GB) **DANGER**: Invisible laser radiation when open. AVOID DIRECT EXPOSURE TO BEAM.

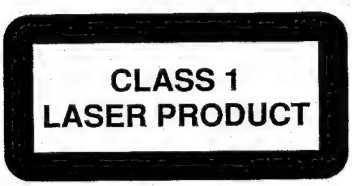

(S) Varning !
Osynlig laserstrålning när apparaten är öppnad och spärren är urkopplad. Betrakta ej strålen.

(DK) Advarsel !
Usynlig laserstråling ved åbning når sikkerhedsafbrydere er ude af funktion. Undgå udsaettelse for stråling.

(FIN) Varoitus !
Avatussa laitteessa ja suojalukituksen ohitettaessa olet altiina näkymättömälle laserisäteilylle. Älä katso säteeseen !

(GB)
After servicing and before returning the set to customer perform a leakage current measurement test from all exposed metal parts to earth ground, to assure no shock hazard exists.
The leakage current must not exceed 0.5mA.

(F)
"Pour votre sécurite, ces documents doivent être utilisés par des spécialistes agréés, seuls habilités à réparer votre appareil en panne".

DISMANTLING INSTRUCTIONS

Dismantling of the Cassette Door

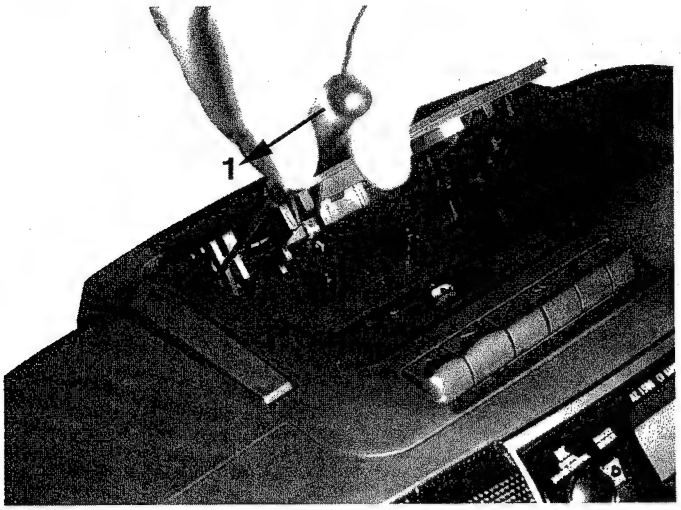

picture 2

- Open cassette door.
- Release left catch by pressing it inwards with a screwdriver as shown in picture 1.
- Pull door on left side up as shown in picture 2.
- Right catch will now be released automatically.

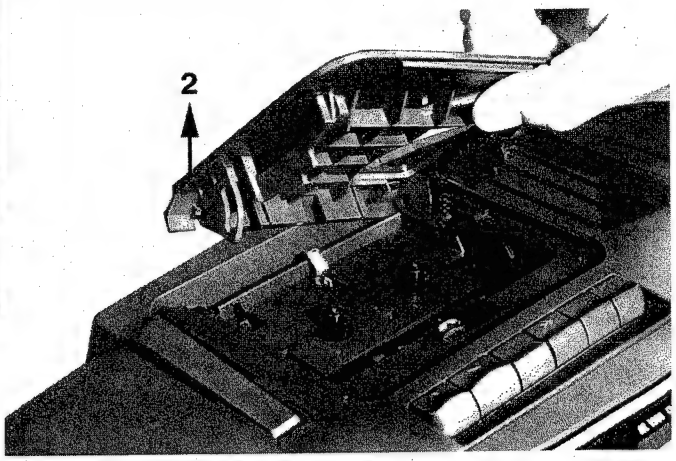

picture 3

Dismantling of the Carrying Handle

- Turn handle upright first.
- Press catch ribs a little bit downwards and pull handle backwards until catch ribs are hold in a slightly lower position.
- Now turn handle completely down ⇒ catch ribs will now automatically be bent downwards and release the handle.
- Pull handle backwards until it is free.

To mount the handle simply put it horizontally into the cabinet until it snaps in

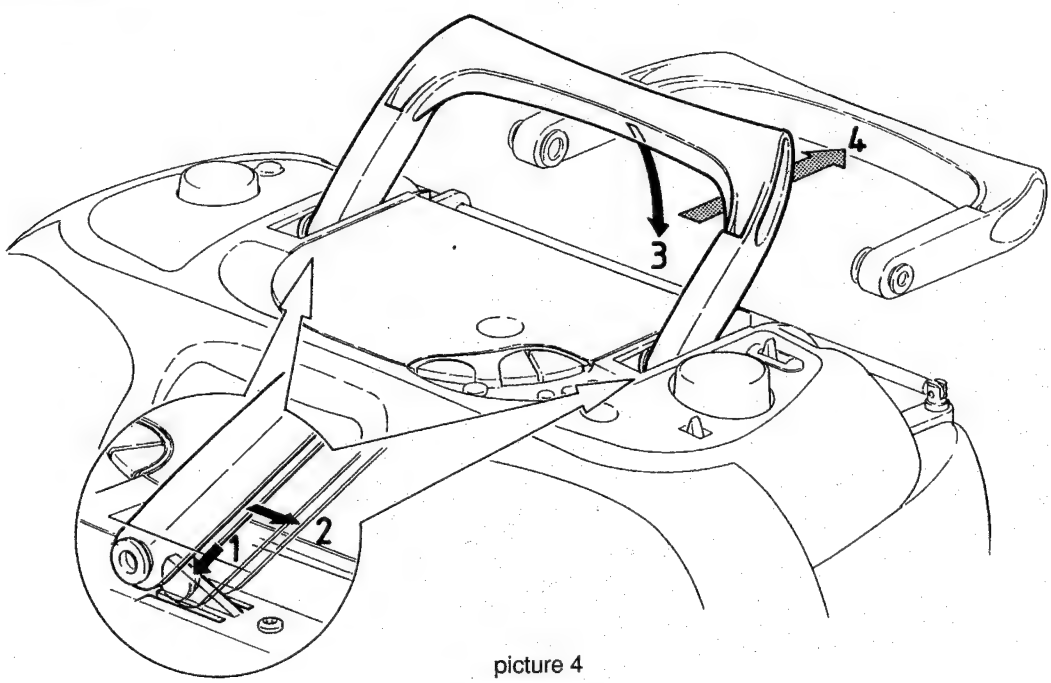

picture 4

DISMANTLING INSTRUCTIONS

Dismantling the Top Cabinet

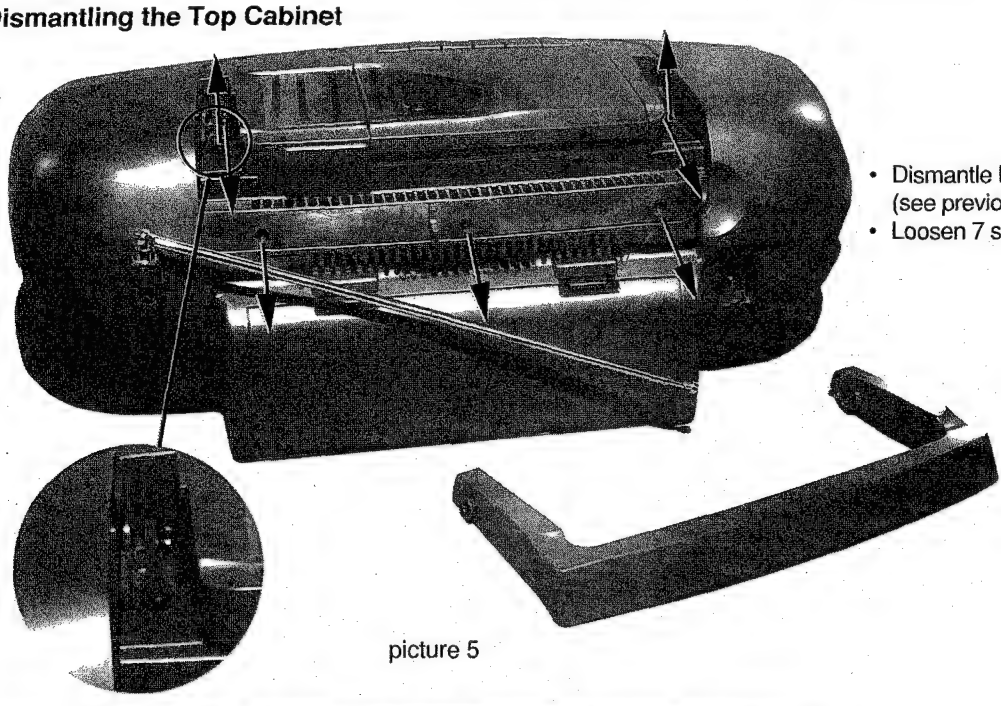

- Dismantle handle first. (see previous page)
- Loosen 7 screws as shown in picture 5.

picture 5

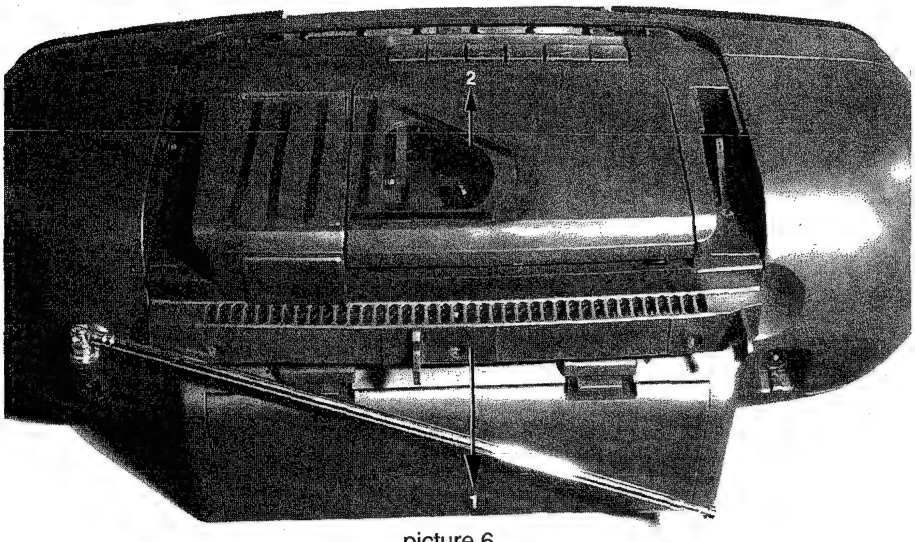

- Move top cabinet backwards to release lugs on front side.
- Pull Top cabinet up.

picture 6

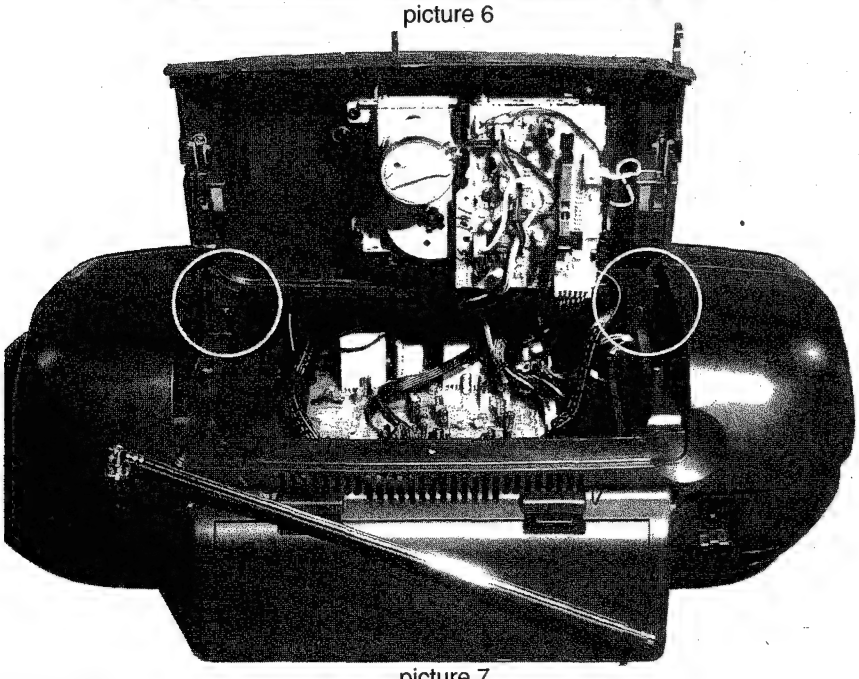

- Put top cabinet in rest position as shown in *picture 7*.

picture 7

DISMANTLING INSTRUCTIONS

Separation Front - Rear Cabinet

- Dismantle handle and top cabinet first. (see previous pages)
- Remove battery lid.
- Loosen 6 screws as shown in picture 8.

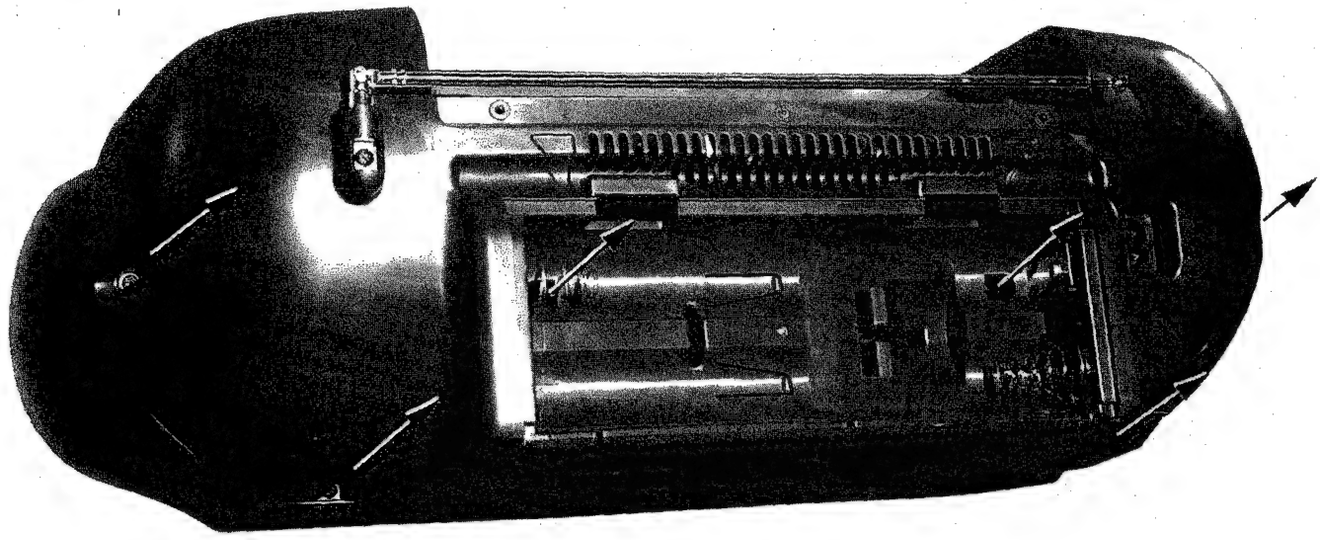

picture 8

- Split cabinet parts as shown in picture 9.

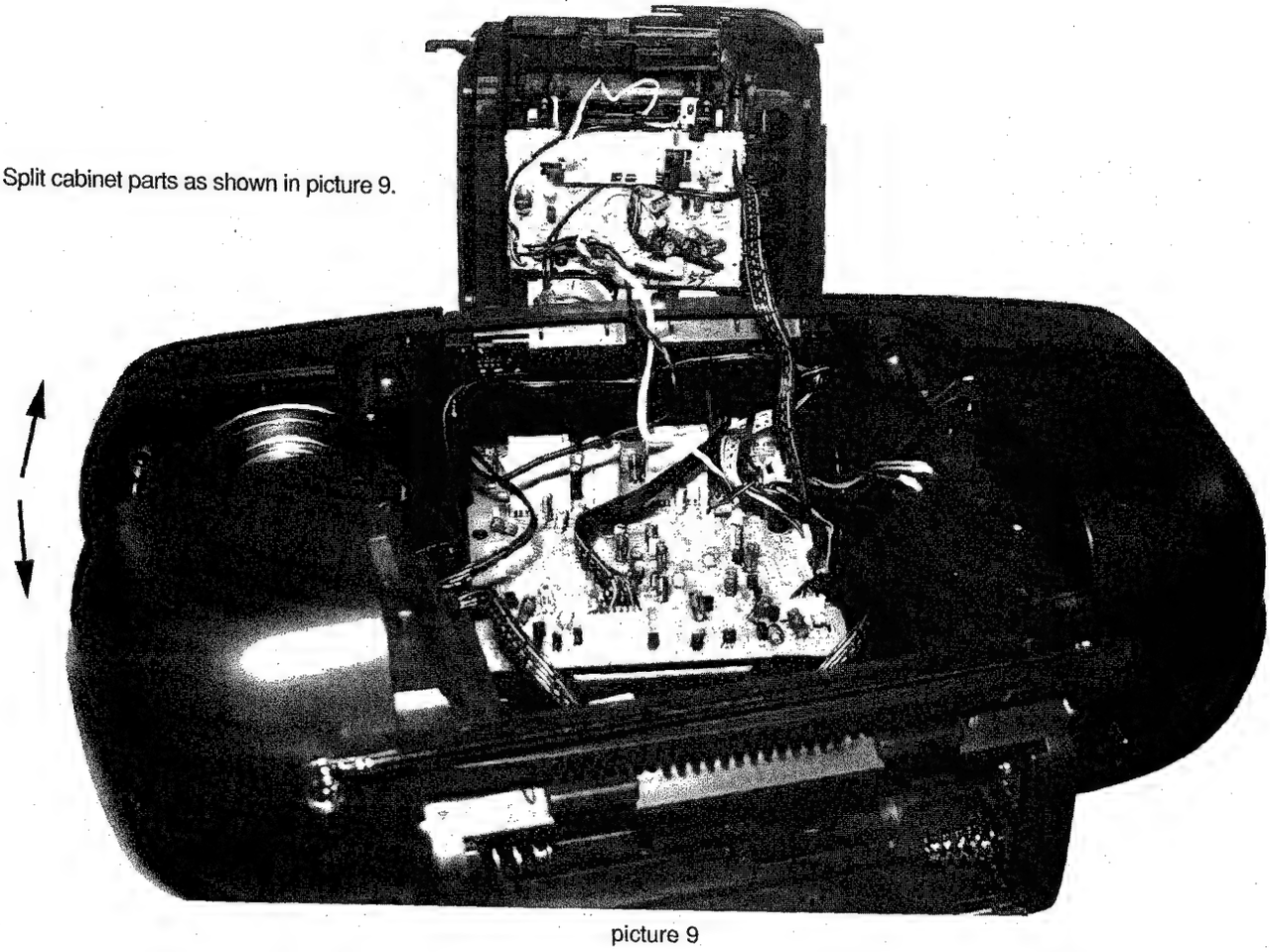

picture 9

SERVICE HINTS

SERVICE TOOLS

TORX T10 screwdriver with shaftlength 150mm 4822 395 50423
TORX screwdriver set SBC 163 .....4822 295 50145

Audio signal disc SBC 429.....4822 397 30184
Playability test disc SBC444 .....4822 397 30245
Test disc 5 (disc without errors) +
Test disc 5A (disc with dropout errors, black spots and fingerprints)
SBC 426/426A 4822 397 30096
Burn in test disc (65 min. 1kHz signal at -30dB level without "pause") ...4822 397 30155

Universal test cassette Fe SBC 420 ..... 4822 397 30071

CIRCUIT DESCRIPTION

For circuit description of the CD part we refer to

CIRCUIT DESCRIPTION ***CD93 PART I*** (4822 725 24041)
chapter 2.2 : TDA1301(DSIC2: Digital Servo IC)

CIRCUIT DESCRIPTION ***New key components of CD 94 program*** (4822 725 25233)
chapter 3 : CD6 decoder SAA7345

HANDLING CHIP COMPONENTS

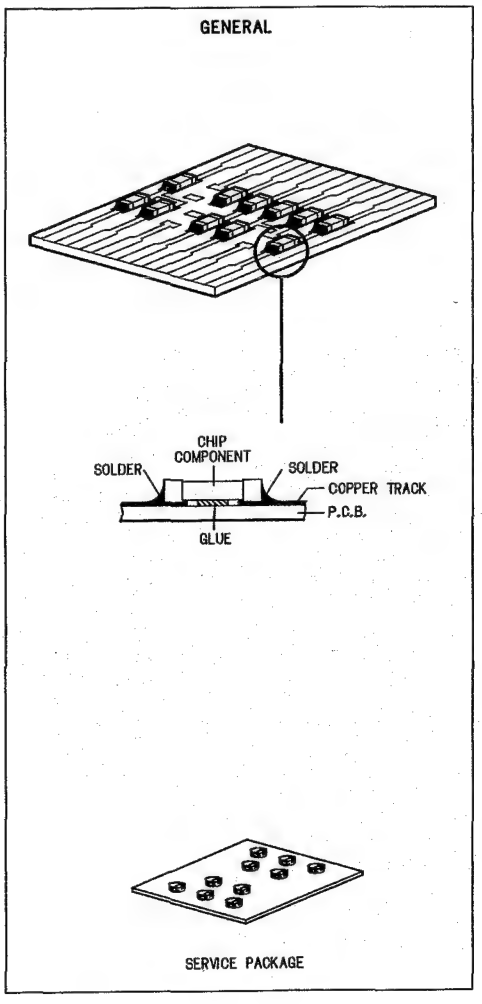

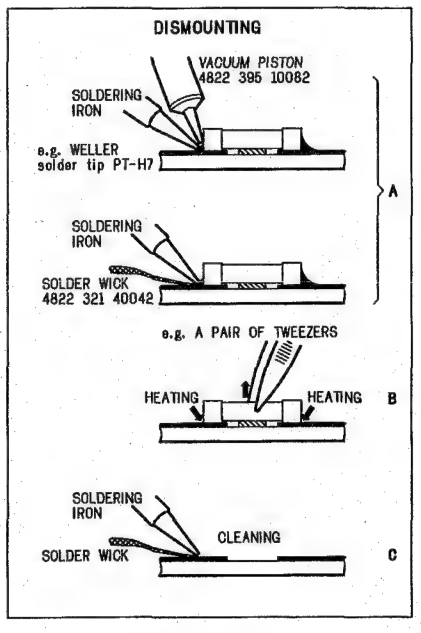

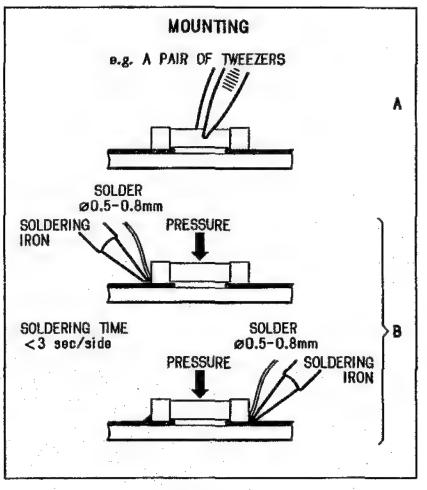

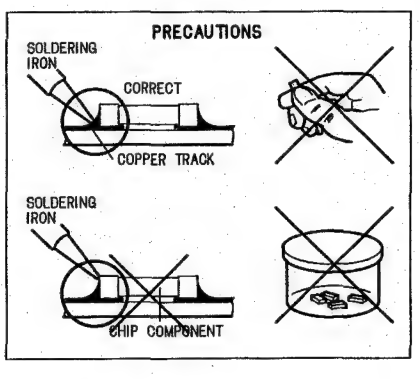

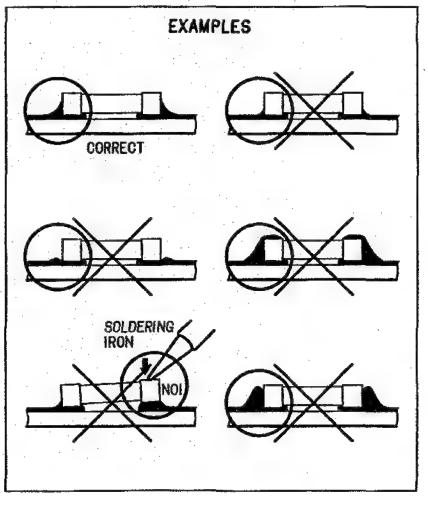

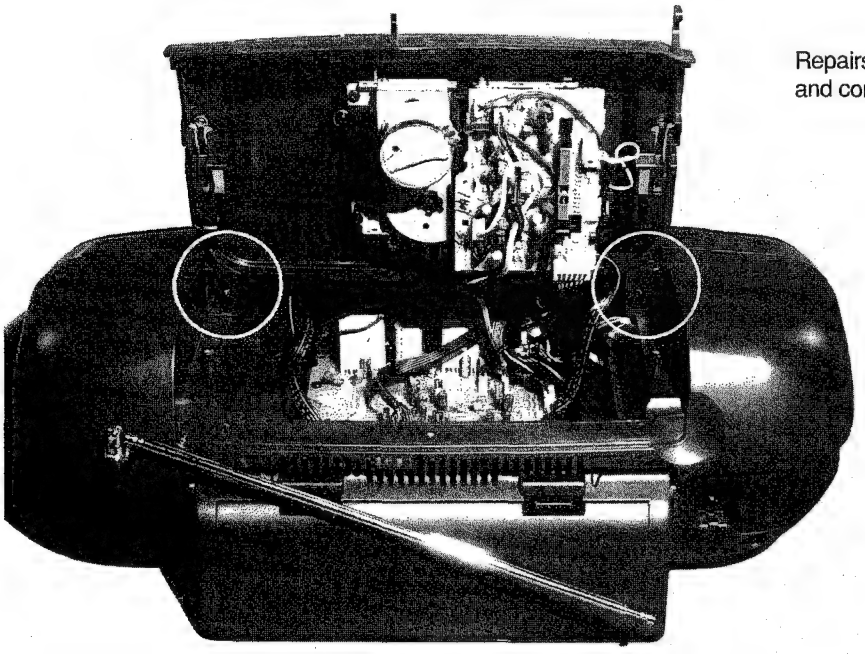

Repairs on RECORDER BOARD
and component side of AUDIO BOARD

Repairs on AUDIO BOARD copper side

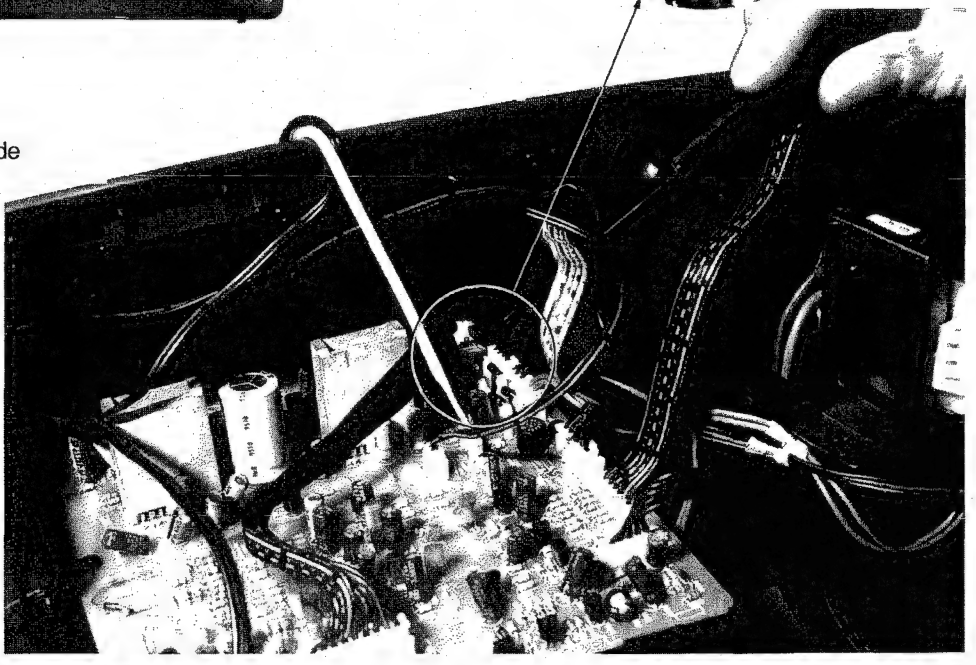

picture 10

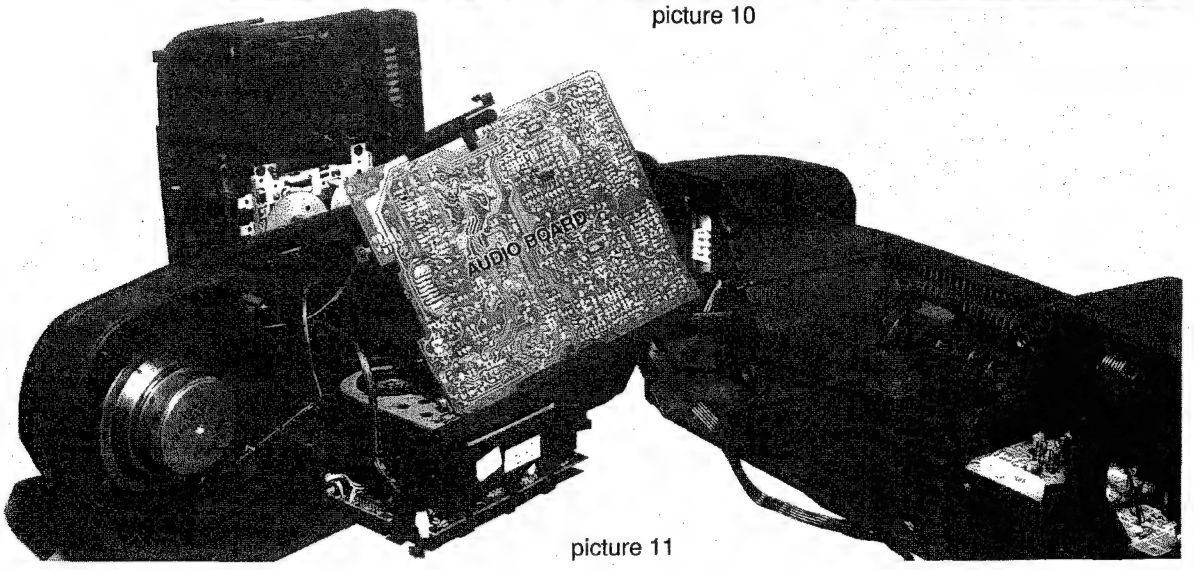

picture 11

Repairs on CD MODULE

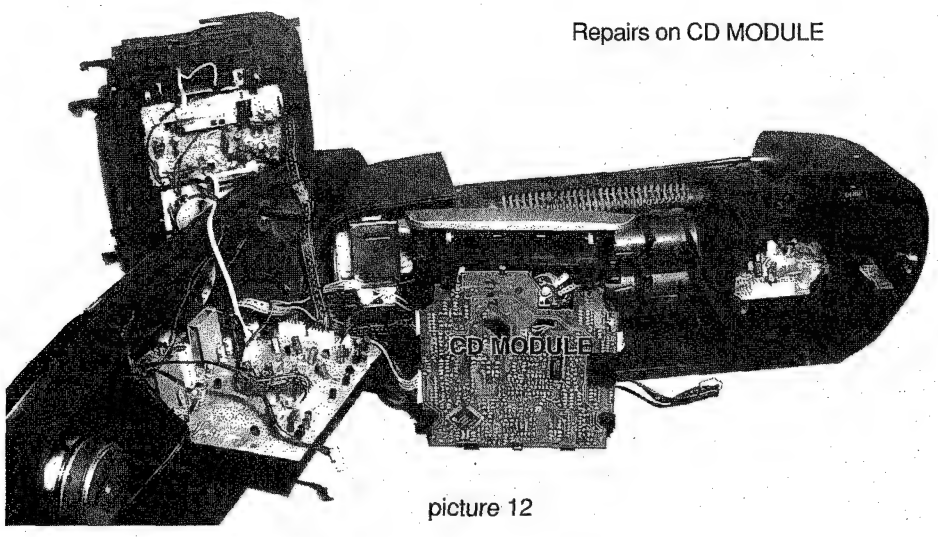

picture 12

Repairs on TUNER BOARD

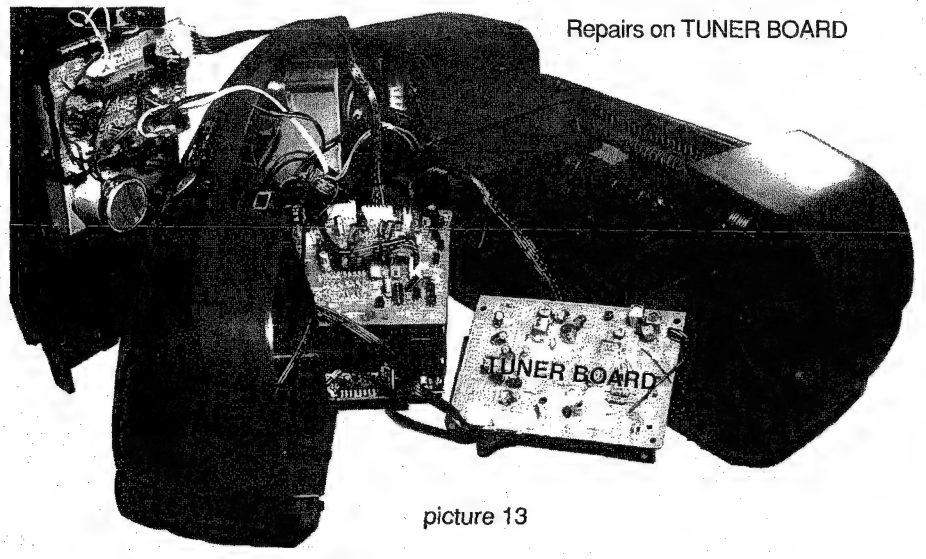

picture 13

Repairs on FRONT BOARD

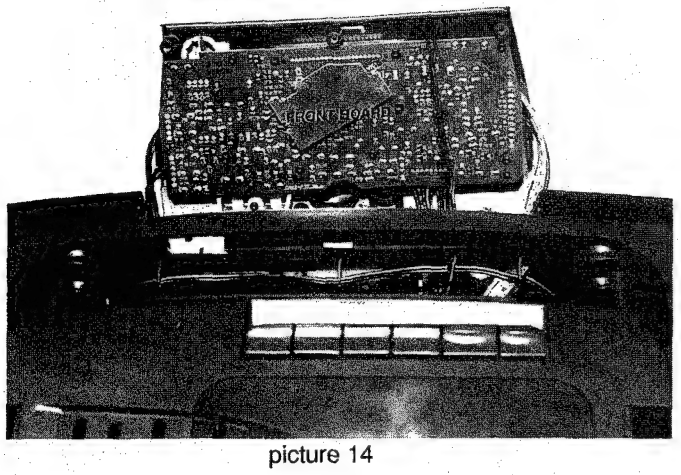

picture 14

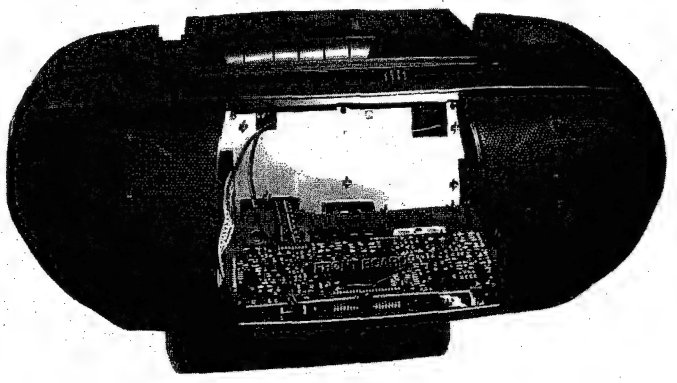

3-7

SERVICE TESTPROGRAM

To enter Service Testprogramm hold ***PLAY & STOP*** buttons depressed while switching the set on.

- To leave Service Testprogram switch power off.
- Function of *Volume up/down* (or rotary volume potmeter), *DSC* and *IS* is independent of the service testprogram.

Display shows version number of the µP - software.

5 88

Slide servo, Radial servo, Focus servo, Disc motor Tray motor and Laser are switched off.
Mute is switched on via decoder IC.
5 stands for Service mode

CD SERVO TEST

PLAY button pressed? N / Y

Tray works as in normal mode. After activation of the tray program returns to SERVO test.

SERVO test

Display shows 5 0088

DISC MOTOR test

STOP button pressed? Y → ***STOP*** button in FOCUS- or PLAY-TEST returns to SERVO-TEST

PLAY button pressed? Y

FOCUS search

Display shows -F 0088 objective moves up&down

FOCUS found? N / Y

Display shows F 0088

PLAY button pressed? N / Y

Disc motor at nom. speed? N / Y

RADIAL test

Display shows PL 88:88 → Play mode MUTE is switched off

Display shows -P 88:88 → Play mode MUTE is switched off

FOCUS o.k.? Y / N

NEXT button pressed? N / Y → CUE - mode jumps in steps of 16 tracks forwards as long as button is hold depressed.

PREV button pressed? N / Y → REVIEW - mode jumps in steps of 16 tracks backwards as long as button is hold depressed.

PROG. button pressed? N / Y → Disc motor turns counter clockwise as long as button is held depressed. (brake)

SHUFFLE button pressed? N / Y → Disc motor turns clockwise as long as button is held depressed. (accelerate)

Slide can be activated in FOCUS test too:
check if Focus functions over the whole disc area

(A) (B)

SLIDE test

NEXT button pressed? N / Y → Slide moves outside as long as button is held depressed.

PREV. button pressed? N / Y → Slide moves inside as long as button is held depressed or inner switch is activated.

(B) (A)

Purpose of PLAY test:

To check if the Audio signal is reproduced.
Subcode info is ignored during this test →
If the CD player functions well in this testmode, but not in the normal Play mode check quality of the eye-pattern signal.
Display shows absolute playing time of the disc in order one can determine position of the slide.

DISPLAY TEST

NEXT button pressed? N / Y

Display shows all segments and flags.

see figure 1

STOP button pressed? N / Y

fig. 1

Additional Information on the display in *SERVO* and *FOCUS* test

indicate key numbers acc. table 1

indicates status of inner switch: 0 switch closed (slide inside) / 1 switch open

indicates status of tray switch: 0 switch closed (tray closed or open) / 1 switch open (tray between end positions)

KEY CODES

KEY	KEY Remote Control	KEY CODE	KEY	KEY Remote Control	KEY CODE
Repeat		00		0	20
Volume up	Volume up	01		1	21
Program CD		03		2	22
Mode		04		3	23
Volume down	Volume down	05		4	24
DSC		06		5	25
Open	Open	09		6	26
HS-dubbing		10		7	27
Previous	Previous	11		8	28
Stop	Stop	12		9	29
Play/Pause	Play/Pause	13	Band		30
Next	Next	14	Program Tuner		31
Shuffle	Shuffle	15	Tuning down		32
Incredible sound		17	Tuning up		33
	Tuner	18	Preset down		34
	CD	19	Preset up		35

table 1

SERVICE PLA

PROG bu (Tuner) pressed? N / Y

Display shows of tuner board a any key will be

e.g. EUr

Service preset fr acc. table 2 are to the RAM.

Tuner is normal except the *PRO* button.[2]

IF-OFFSET CORRECTION [1]

PROG button (Tuner) pressed? N / Y

IF - OFFSET correction activated [1].

POWER switched off? N / Y

Exit Service Testprogram

[1] In sets with 30kHz grid on FM band it may occur that the tuned frequency is indicated wrong on the display because of tolerances of the discriminator filter.
For that reason the testsoftware is prepared for an *automatic IF-offset correction*.
Note: This test functions only with the East European tuner version /14/34.
The test was executed on every set in the production line.
In case the discriminator filter has to be exchanged the *automatic IF-offset correction* should also be executed after repair.
To execute the *automatic IF-offset correction*:
* feed a strong 87.5MHz signal to the antenna
* press the PROGRAM button
The µP starts now several times the *search* mode.
If the transmitter was found at 87.5MHz the stop-frequency sent by the radio IC is compared with the nominal frequency. When the same difference is found twice the value will be stored as offset.
The actual used offset is shown on the display (-3, -2, -1, 0, 1, 2, 3).

[2] Preset frequencies of table 2 can be used as in normal tuner mode.
If fieldstrength is high enough "PROGRAM" flag will light up.
Preset frequencies stored by the customer are not influenced.

[3]

3-7

To enter Service Testprogramm hold ***PLAY & STOP*** buttons depressed while switching the set on.

- To leave Service Testprogram switch power off.
- Function of *Volume up/down* (or rotary volume potmeter), *DSC* and *IS* is independent of the service testprogram.

Display shows version number of the µP - software.

5 88

Slide servo, Radial servo, Focus servo, Disc motor Tray motor and Laser are switched off.
Mute is switched on via decoder IC.
5 stands for Service mode

DISPLAY TEST

N — ***NEXT*** button pressed? — Y

Display shows all segments and flags.

see figure 1

N — ***STOP*** button pressed? — Y

SERVICE PLAY TESTS

TUNER TEST

N — ***PROG*** button (Tuner) pressed? — Y

Display shows version of tuner board as long as any key will be pressed.

e.g. EUr

Service preset frequencies acc. table 2 are copied to the RAM.

Tuner is normal working except the *PROGRAM* button.[2]

IF-OFFSET CORRECTION [1]

PROG button (Tuner) pressed? — N

Y

IF - OFFSET correction activated [1].

CD PLAY TEST [3]

Mode switched to *CD*? — N

Y

CD is in normal *PLAY* mode.
In case of failures error codes acc. table 3 will be indicated on the display.

POWER switched off? — N

Y

Exit Service Testprogram

SLIDE test

N — ***PREV.*** button pressed? — N

Y

Slide moves inside as long as button is held depressed or inner switch is activated.

A

fig. 1

Additional Information on the display in *SERVO* and *FOCUS* test

- indicate key numbers acc. table 1
- indicates status of inner switch: 0 switch closed (slide inside) / switch open
- indicates status of tray switch: 0 switch closed (tray closed or open) / switch open (tray between end positions)

KEY CODES

KEY	KEY Remote Control	KEY CODE	KEY	KEY Remote Control	KEY CODE
Repeat		00		0	20
Volume up	Volume up	01		1	21
Program CD		03		2	22
Mode		04		3	23
Volume down	Volume down	05		4	24
DSC		06		5	25
Open	Open	09		6	26
HS-dubbing		10		7	27
Previous	Previous	11		8	28
Stop	Stop	12		9	29
Play/Pause	Play/Pause	13	Band		30
Next	Next	14	Program Tuner		31
Shuffle	Shuffle	15	Tuning down		32
Incredible sound		17	Tuning up		33
	Tuner	18	Preset down		34
	CD	19	Preset up		35

table 1

1) In sets with 30kHz grid on FM band it may occur that the tuned frequency is indicated wrong on the display because of tolerances of the discriminator filter.
For that reason the testsoftware is prepared for an *automatic IF-offset correction*.
Note: This test functions only with the East European tuner version /14/34.
The test was executed on every set in the production line.
In case the discriminator filter has to be exchanged the *automatic IF-offset correction* should also be executed after repair.
To execute the *automatic IF-offset correction*:
* feed a strong 87.5MHz signal to the antenna
* press the PROGRAM button
The µP starts now several times the *search* mode.
If the transmitter was found at 87.5MHz the stop-frequency sent by the radio IC is compared with the nominal frequency. When the same difference is found twice the value will be stored as offset.
The actual used offset is shown on the display (-3, -2, -1, 0, 1, 2, 3).

2) Preset frequencies of table 2 can be used as in normal tuner mode. If fieldstrength is high enough "PROGRAM" flag will light up. Preset frequencies stored by the customer are not influenced.

3) The *CD PLAY TEST* is intended to be used for continuously playing a disc in order to detect intermittend or not reproducible failures. The error code indicates where the failure can be found.

SERVICE PRESET FREQUENCIES

REGION / PRESET	EUr	EE u-88 [1]	USA	05E	05S	HOr	JAP
	EUROPE FM/MW/LW /00/05/20/25	***East EUROPE FM/MW/LW*** /14/34	***USA FM/MW*** /17/37	***OVERSEAS FM/MW*** [4]Grid switchable 10-100kHz/9-50kHz /01/21	***OVERSEAS FM/MW/SW*** [4]Grid switchable 10-100kHz/9-50kHz /11/31	***KOREA FM/MW-stereo*** /13/33	***JAPAN FM/MW-stereo*** /06/26
1	87,5 MHz	65,81 MHz	87,5 MHz	87,5 MHz	87,5 MHz	87,5 MHz	76 MHz
2	108 MHz	108 MHz	108 MHz	108 MHz	108 MHz	108 MHz	107,75 MHz (CH 3)
3	531 kHz	74 MHz	530 kHz	530/531 kHz	530/531 kHz	531 kHz	90 MHz
4	1602 kHz	87,5 MHz	1700 kHz	1700/1602 kHz	1700/1602 kHz	1602 kHz	95,75 MHz (CH 1)
5	558 kHz	531 kHz	560 kHz	560/558 kHz	560/558 kHz	558 kHz	101,75 MHz (CH 2)
6	1494 kHz	1602 kHz	1500 kHz	1500/1494 kHz	1500/1494 kHz	1494 kHz	531 kHz
7	153 kHz	558 kHz	98MHz	98/87,5MHz	98/3,9 MHz		1602 kHz
8	279 kHz	1494 kHz			87,5/12,1 MHz		558 kHz
9	198 kHz	153 kHz			87,5/4,2 MHz		1494 kHz
10	98MHz	279 kHz			87,5/11 MHz		80MHz
11		198 kHz		87,5/98MHz	87,5/98MHz	98MHz	

table 2

4) To toggle frequency grid press ***BAND*** button for more than 5s in normal tuner mode (**not** in service testmode).
Display will show either 9Gr id or 10Gr id for 2 s.

CD ERROR codes

Error number	*Error description*	*Error type*
E 1002	**Focus Error** Triggered when the focus could not be found within a certain time when starting up the CD or when the focus is lost for a certain time during playing the CD.	W
E 1007	**Subcode Error** No subcode could have been read, even not after retrying 10 times to restart the PLL and jumping 10 tracks. When this happens the servo is stopped and restarted (as if the user would have pressed *STOP* and then *PLAY* immediately) to recover.	W
E 1008	**Out of lead-in during reading TOC** Triggered when during reading the TOC the lead-in (track no. 0) is left. This can be caused by a misaligned inner-switch or by a disc with a mispositioned lead-in.	W
E 1010	**Radial error** Triggered when the radial servo is not on track for a certain time during playing the CD.	W
E 1011	**Slide error** Generated when the inner-switch did not open within a certain time when the pick up is moved from the inner position outside.	W
E 1012	**Fatal slide error** Generated when the inner-switch did not close within a certain time when the pick up is moved inside. Inner-switch or slide motor problems.	F
E 1013	**Turntable motor error** Generated when the CD did not reach 75% of speed during startup within a certain time. Discmotor problem.	F
E 1014	**Too less offtracks.** Triggered when the servo processor counts too less tracks in a defined time during JUMPS. This can be caused by a disturbed HF-signal (the tracks cannot be recognized exactly) or slide motor problems.	W
E 1020	**PLL lock error** When the PLL did not lock after 10 retries then this warning message is generated and the servo is stopped and restarted (as if the user would have pressed *STOP* and then *PLAY* immediately) to recover.	W

table 3

Error type: W = Warning → set continues operation, message remains on the display until next error occurs or any key is pressed.
(If the set does not function after 10 retries Warning changes to Fatal Error)

F = Fatal Error → set stops operation, message remains on the display.
(The set can only be operated again via a *reset*)

servtest JEWEL digital, 190496

APPARATUS BLOCK DIAGRAM

4-1

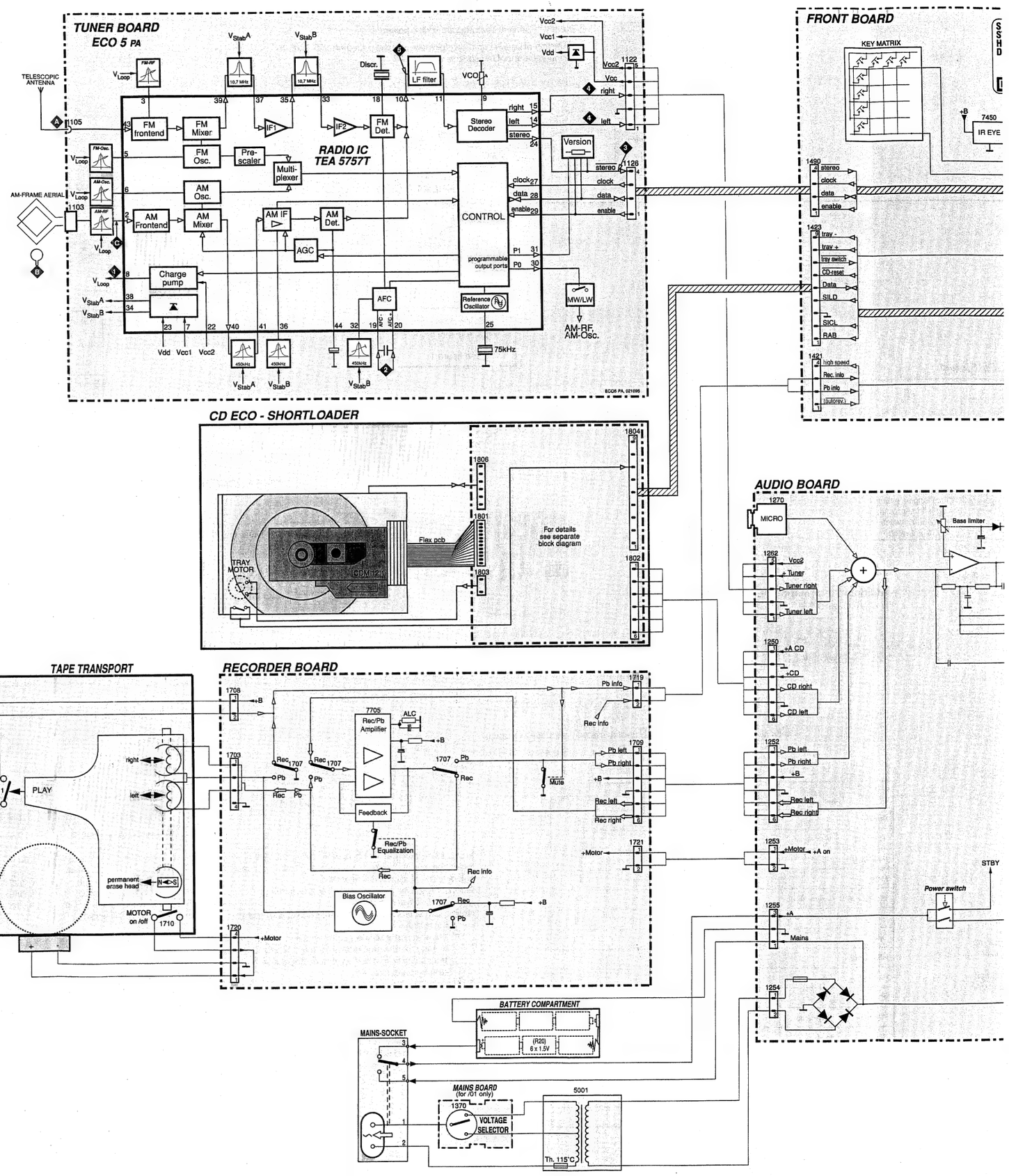

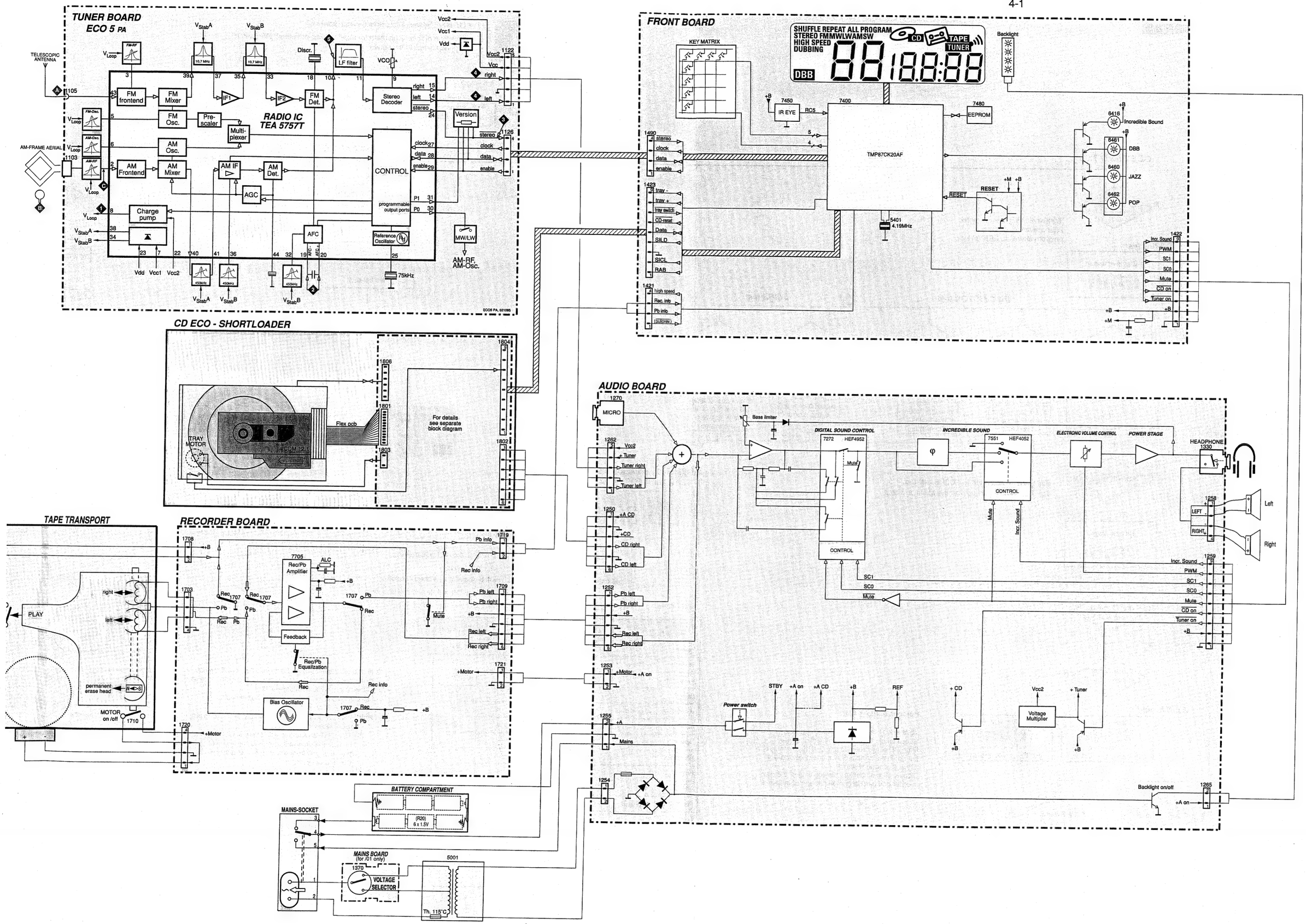
TUNER BOARD
ECO 5 PA
RADIO IC
TEA 5757T
FM frontend
FM Mixer
FM Osc.
Pre-scaler
Multi-plexer
AM Osc.
AM Frontend
AM Mixer
AM IF
AM Det.
AGC
Charge pump
AFC
CONTROL
programmable output ports
Reference Oscillator
Stereo Decoder
Version
LF filter
VCO
Discr.
MW/LW
AM-RF, AM-Osc.
75kHz
TELESCOPIC ANTENNA
AM-FRAME AERIAL
FRONT BOARD
KEY MATRIX
SHUFFLE REPEAT ALL PROGRAM
STEREO FMMWLWAMSW
HIGH SPEED
DUBBING
DBB
CD
TAPE
TUNER
Backlight
IR EYE
EEPROM
TMP87CK20AF
RESET
Incredible Sound
DBB
JAZZ
POP
4.19MHz
CD ECO - SHORTLOADER
TRAY MOTOR
Flex pcb
For details see separate block diagram
AUDIO BOARD
MICRO
Bass limiter
DIGITAL SOUND CONTROL
INCREDIBLE SOUND
ELECTRONIC VOLUME CONTROL
POWER STAGE
HEADPHONE
CONTROL
Left
Right
Incr. Sound
PWM
SC1
SC0
Mute
CD on
Tuner on
TAPE TRANSPORT
PLAY
permanent erase head
MOTOR on /off
RECORDER BOARD
Rec/Pb Amplifier
Feedback
Rec/Pb Equalization
Bias Oscillator
Power switch
Voltage Multiplier
Backlight on/off
BATTERY COMPARTMENT
(R20) 6 x 1.5V
MAINS-SOCKET
MAINS BOARD (for /01 only)
VOLTAGE SELECTOR
Th. 115°C

5-1

WIRING DIAGRAM

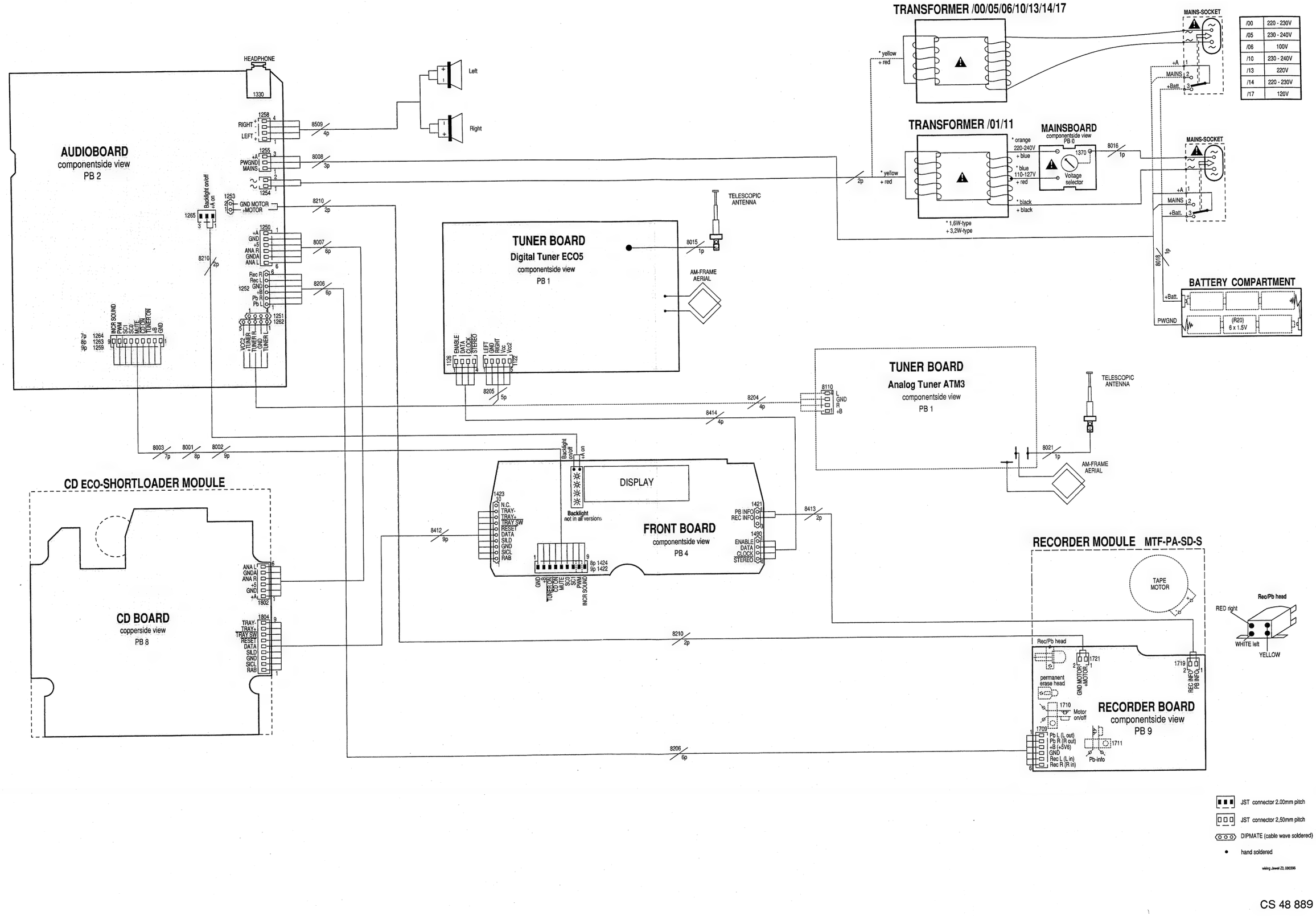

CS 48 889

6-1

1400 K 1 1401 K 1 1402 K 2 1403 K 3 1404 K 1 1405 K 1
1406 K 2 1407 K 3 1408 K 3 1409 M 1 1410 L 1 1411 L 2
1412 L 3 1413 M 1 1414 L 1 1415 M 2 1416 M 3 1417 M 3
1418 K 3 1419 L 3 1420 A 8 1421 J20 1422 B20 1423 E20
1424 B20 1490 M20 2401 E 7 2402 G 7 2403 E 6 2408 I 1
2409 J 1 2410 J 2 2411 J 3 2412 K 3 2415 M14 2416 K19
2418 K19 2420 N18 2421 N18 2422 N19 2423 N19 2450 M16
2460 G19 2461 G18 2468 G19 2468 G18 2475 D18 2480 C14
3400 E 6 3401 G 7 3402 G 6 3403 I 4 3404 I 4 3405 J 4
3406 J 4 3407 J 4 3408 K 4 3409 L 4 3410 L 4 3411 M 4
3412 L13 3413 J16 3415 J14 3416 M12 3417 J18 3418 B18
3419 C18 3421 B18 3422 B18 3423 B18 3424 E18 3425 E 7
3426 E7 3427 E18 3428 E18 3429 F18 3430 F18 3431 F18
3432 F18 3433 G18 3434 G18 3435 G 5 3436 G 5 3438 D 5
3439 D 5 3441 G 4 3442 G 4 3443 G 4 3445 J18 3446 K18
3447 J18 3449 J18 3450 L15 3451 L15 3452 M14 3458 C 7
3459 D 7 3460 M 9 3461 M 9 3462 M10 3463 M10 3464 M 7
3465 M 7 3466 L 8 3472 M19 3473 M19 3474 N19 3475 C18
3478 D18 3479 C18 3480 C16 3481 C16 3482 D16 3483 D16
3484 K 4 3485 L 4 3486 L 4 3487 M 4 3488 M18 3489 M19
3490 L18 3491 M19 3492 L17 3493 M17 3494 M17 3495 N17
3496 B14 3497 K14 3499 D18 3500 E19 3501 E19 3502 F19
3503 F19 3504 F19 3505 F19 3506 G19 3507 G19 3517 H 7
6400 G 4 6401 E 5 6402 E 5 6416 L12 6460 L 8 6461 L10
6462 L 7 7400 G11 7402 G 6 7403 G 5 7404 B19 7405 C19
7406 L18 7411 D 5 7416 M12 7450 M15 7460 M 8 7461 M10
7462 M 7 7480 C15 9450 F 7

FRONT BOARD

DISPLAY CONNECTION TABLE

Pin	C1	C2	C3	C4	C4'
1	--	--	--	Com 4	--
2	--	--	Com 3	--	--
3	--	Com 2	--	--	--
4	--	--	--	--	Com 4'
5	Com 1	--	--	--	--
6	7a	7b	7c	7d	--
7	7f	7g	7e	--	--
8	6a	6b	6c	6d	--
9	6f	6g	6e	--	TUNER
10	5a	5b	5c	5d	--
11	5f	5g	5e	--	TAPE
12	4a	4b	4c	4d	--
13	4f	4g	4e	--	CD
14	2a	2b	2c	2d	--
15	2f	2g	2e	--	--
16	1a	1b	1c	1d	--
17	1f	1g	1e	--	PROGRAM
18	ALL	AM	SW	--	--
19	REPEAT	MW	LW	STEREO	--
20	SHUFFLE	FM	DUBBING/ HIGH SPEED	DBB	--
21	COLON	DOT2	3e,3f	DOT1	--

BACKLIGHT DISPLAY

RESET

Sound Control Indication

7400 TMP87CK20AF TMP87PM20F (OTP)

EEPROM ST24CO1M6

IR-RECEIVER GP1U28XP

to/from AUDIO BOARD 1259,1263

to/from CD MODULE 1804

to/from RECORDER BOARD 1719

to/from ECO5 TUNER BOARD 1126

DC voltages measured with 9V battery supply in Tuner mode unless stated otherwise.

(I) only for versions with INCREDIBLE SOUND

(H) provisional for HSD versions only

(F) provisional only

6-2

2401 B 4	2412 A 6	2423 A 5	2480 A 2	3406 B 5	3413 A 5	3422 B 4	3430 A 3	3436 A 5	3446 A 5	3460 B 3	3474 B 6	3482 A 3	3494 A 5	3503 A 1	4401 A 5	4407 B 6	7403 B 1	7460 A 2
2403 B 5	2415 A 2	2460 A 2	3401 A 4	3407 A 5	3414 A 5	3423 B 4	3431 A 3	3438 B 2	3449 B 6	3462 B 3	3475 B 4	3483 A 3	3495 A 4	3504 A 1	4402 B 4	4408 B 1	7404 B 2	7461 A 1
2408 B 4	2416 B 6	2461 A 2	3402 A 5	3408 A 5	3415 B 4	3425 B 4	3432 A 3	3439 B 2	3450 A 1	3464 B 3	3478 B 3	3489 B 6	3497 B 4	3505 B 1	4403 B 5	4409 B 1	7405 B 2	7462 A 2
2409 A 5	2418 A 6	2466 B 1	3403 B 4	3409 A 5	3416 B 1	3427 A 3	3433 B 3	3441 B 1	3452 A 2	3466 B 1	3479 B 4	3490 B 6	3500 A 1	3506 B 1	4404 B 5	4419 B 5	7406 B 6	7480 A 3
2410 B 4	2421 B 5	2468 B 1	3404 A 5	3410 A 4	3417 A 5	3428 A 3	3434 B 3	3442 B 1	3458 A 5	3472 B 6	3480 A 3	3492 A 5	3501 A 1	3507 B 1	4405 B 4	7400 A 4	7411 B 2	
2411 B 4	2422 A 5	2475 B 4	3405 B 4	3411 A 5	3419 B 4	3429 A 3	3435 A 2	3443 B 1	3459 A 5	3473 B 6	3481 A 3	3493 A 4	3502 A 1	4400 B 5	4406 B 3	7402 A 5	7416 B 1	

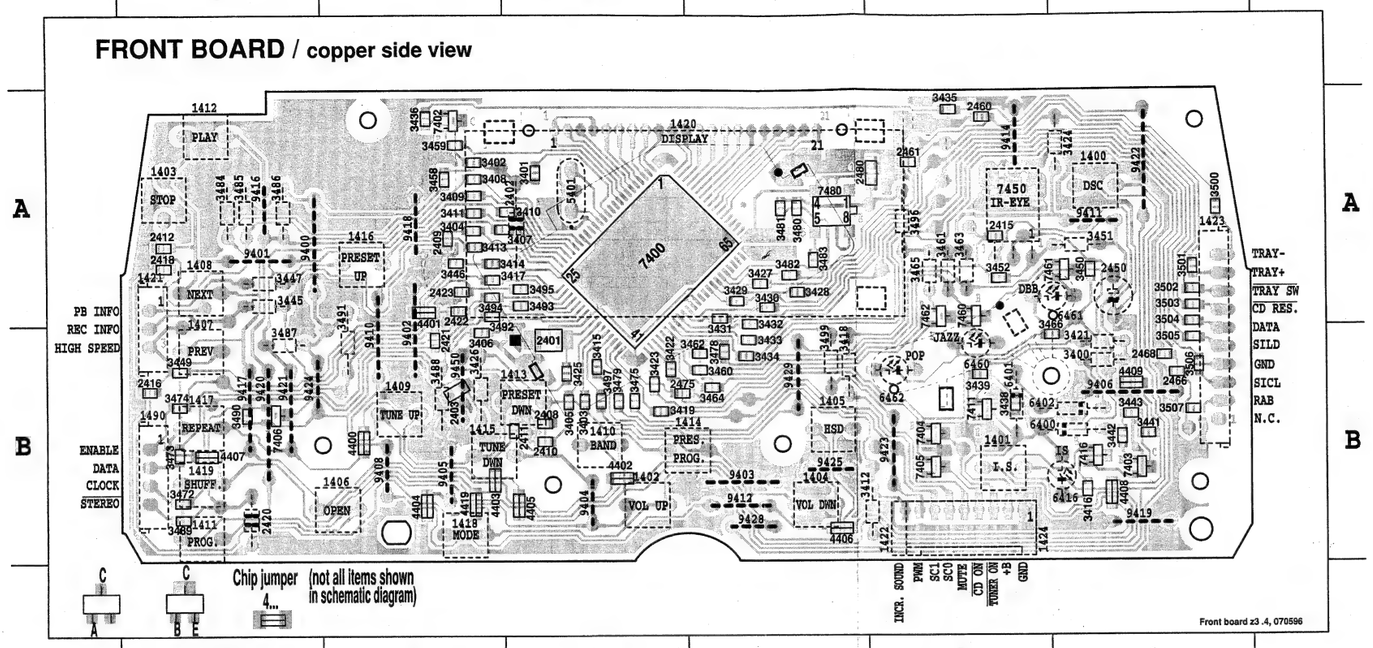

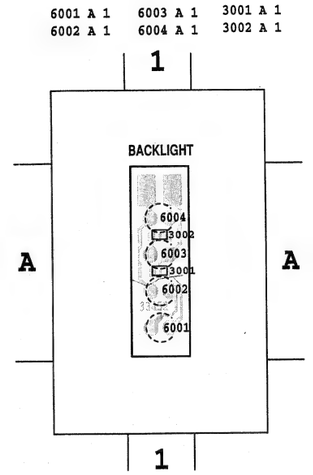

1400 A 1	1406 B 5	1412 A 6	1418 B 5	1424 B 2	3412 B 2	3447 A 6	3485 A 6	3499 B 3	6460 B 2	9402 B 5	9410 B 5	9418 A 5	9424 B 6					
1401 B 2	1407 B 6	1413 B 4	1419 B 6	1490 B 6	3418 B 3	3451 A 1	3486 A 6	5401 A 4	6461 A 1	9403 B 3	9411 A 1	9419 B 1	9425 B 3					
1402 B 4	1408 A 6	1414 B 3	1420 A 3	2402 A 4	3421 B 1	3461 A 2	3487 B 6	6400 B 1	6462 B 2	9404 B 4	9412 B 3	9420 B 6	9428 B 3					
1403 A 6	1409 B 5	1415 B 5	1421 B 6	2420 B 6	3424 A 1	3463 A 2	3488 B 5	6401 B 2	7450 A 2	9405 B 5	9414 A 2	9421 B 6	9429 B 3					
1404 B 3	1410 B 4	1416 A 5	1422 B 2	2450 A 1	3426 B 5	3465 A 2	3491 B 5	6402 B 1	9400 A 6	9406 B 1	9416 A 6	9422 A 1	9450 B 5					
1405 B 3	1411 B 6	1417 B 6	1423 B 1	3400 B 1	3445 A 6	3484 A 6	3496 A 2	6416 B 1	9401 A 6	9408 B 5	9417 B 6	9423 B 2						

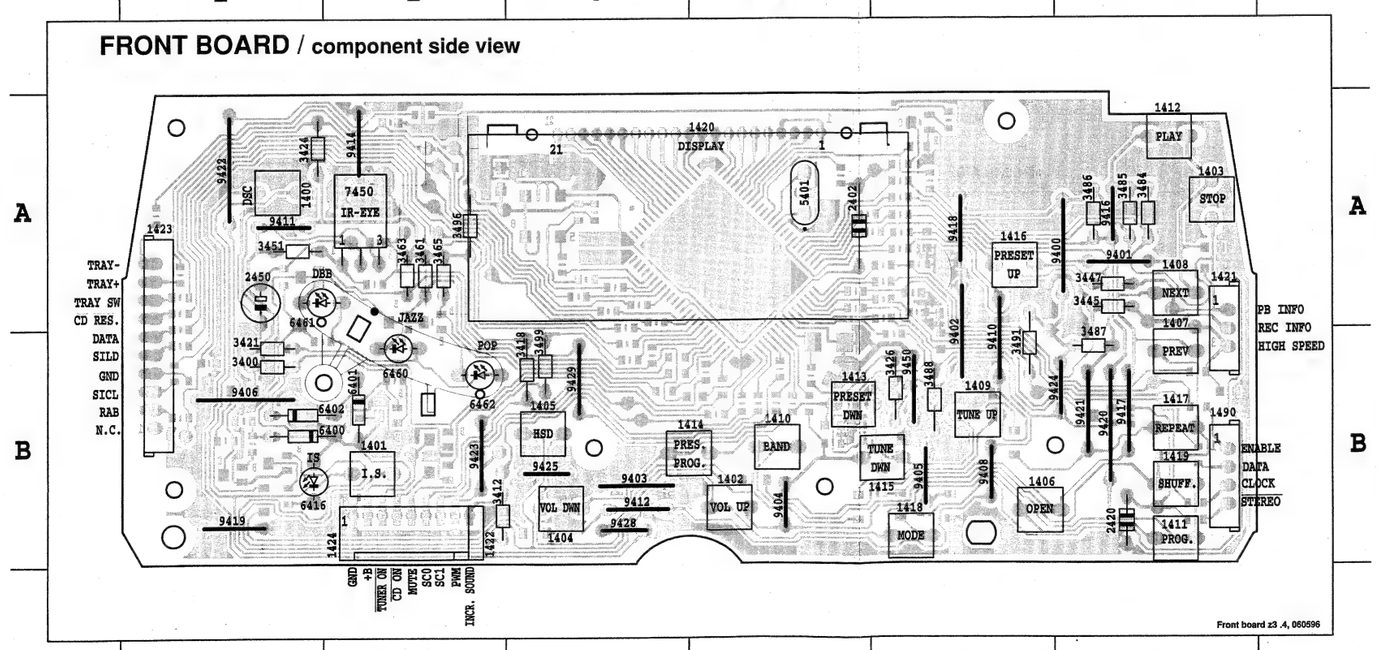

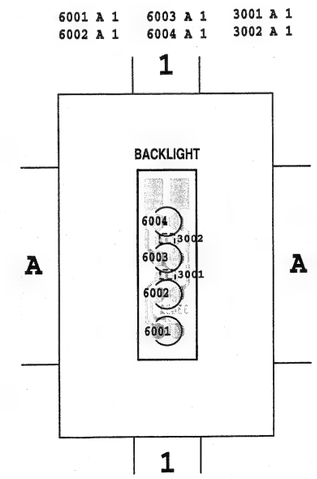

This assembly drawing shows a summary of all possible versions.
For components used in a specific version see schematic diagram respectively partslist.

7-1

TUNER BOARD ECO5 / PA

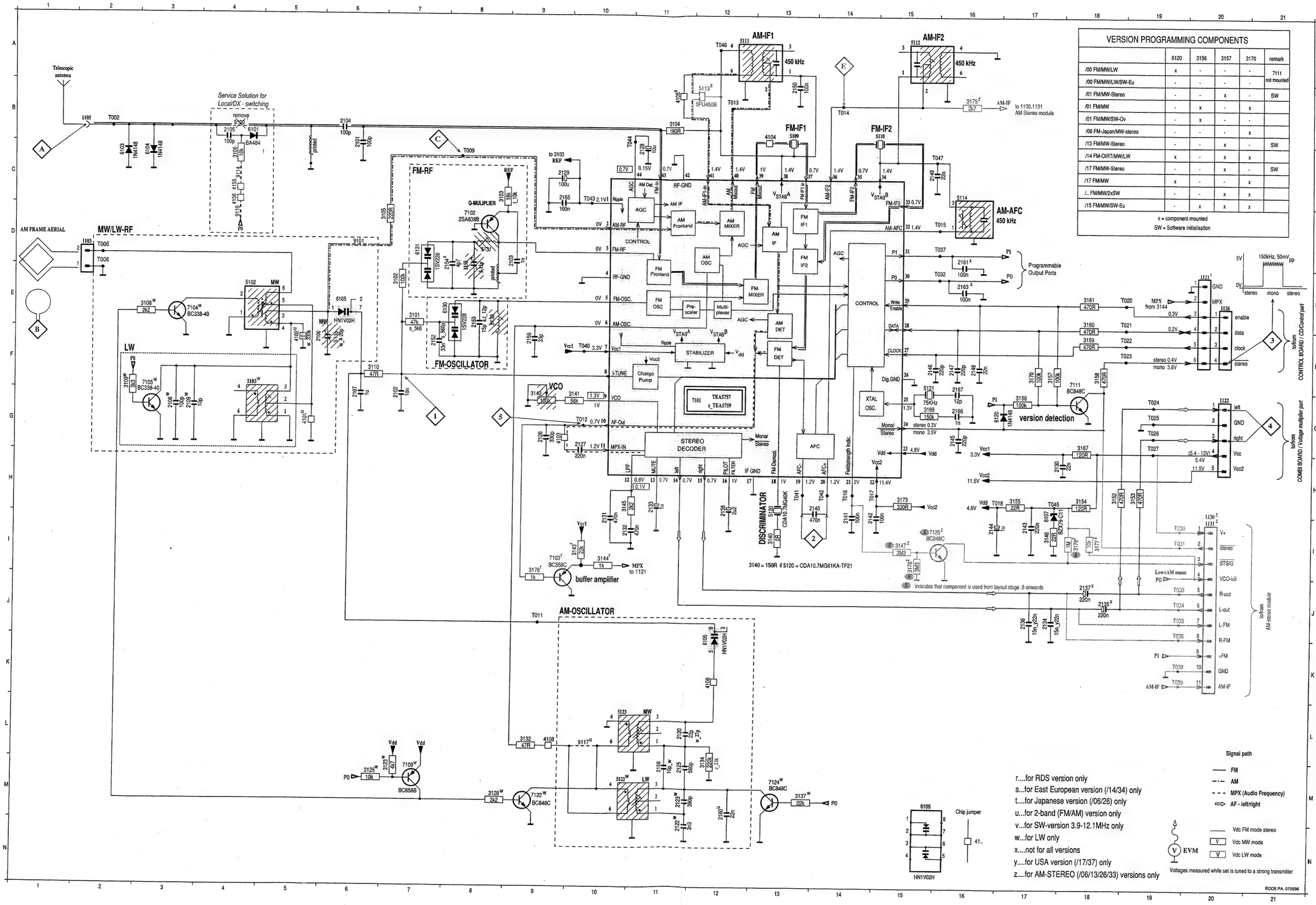

VERSION PROGRAMMING COMPONENTS					
	6120	3156	3157	3170	remark
/00 FM/MW/LW	x	-	-	-	7111 not mounted
/00 FM/MW/LW/SW-Eu	-	-	-	-	
/01 FM/MW-Stereo	-	-	x	-	SW
/01 FM/MW	-	x	-	x	
/01 FM/MW/SW-Ov	-	x	-	-	
/06 FM-Japan/MW-stereo	-	-	-	x	
/13 FM/MW-Stereo	-	-	x	-	SW
/14 FM-OIRT/MW/LW	x	-	x	x	
/17 FM/MW-Stereo	-	-	x	-	SW
/17 FM/MW	x	-	-	x	
/.. FM/MW/2xSW	-	-	x	x	
/15 FM/MW/SW-Eu	-	x	x	x	

x = component mounted
SW = Software initialisation

1103 D 2
1105 B 2
1121 E20
1122 G20
1128 E20
1130 I20
1131 I20
2101 C 6
2102 G 7
2103 D 9
2104 B 6
2105 F 5
2107 G 6
2108 G 3
2109 G 3
2120 L11
2122 N11
2123 M11
2125 M11
2126 G 9
2127 G10
2128 C11
2129 C 9
2130 H17
2131 I10
2132 I10
2133 H11
2134 J17
2135 J18
2136 J17
2137 I18
2138 H12
2140 H14
2141 H14
2142 H14
2143 I17
2144 I17
2145 G16
2146 F15
2147 F16
2148 F16
2149 C15
2150 B13
2152 F 7
2153 E 8
2154 E 7
2155 D 8
2158 M11
2159 F 9
2160 M12
2161 D16
2163 E16
2165 C 9
2166 G16
2167 F16
3101 E 7
3102 E 7
3103 C 8
3104 B11
3105 D 8
3106 E 8
3109 F 2
3110 F 6
3123 M 7
3125 M 6
3128 M 8
3132 L 9
3134 M12
3137 M13
3140 I13
3141 G10
3142 G 9
3143 I10
3144 I10
3145 H10
3146 I17
3147 I15
3152 H18
3153 H19
3154 H18
3155 H17
3156 G17
3157 F17
3158 F18
3159 F18
3160 E18
3161 E18
3167 G18
3169 G15
3170 F17
3173 H15
3175 B16
3176 J 9
3177 I18
3178 I15
3179 I18
4101 G 5
4102 F 5
4103 G 9
4104 B13
4105 B11
4106 K12
4108 L 9
5102 E 4
5103 F 4
5109 B13
5110 B14
5111 A13
5112 A15
5113 B12
5114 C16
5120 H13
5121 F15
5122 M11
5123 L11
5130 E 8
5131 D 8
6103 C 2
6104 C 3
6105 K12
6105 E 6
6107 H17
6120 G16
6130 E 7
6131 D 7
7101 G11
7102 D 8
7103 I 9
7104 E 3
7105 F 2
7109 M 7
7111 F18
7122 M 9
7124 M13
7125 I15
9100 B 4
9101 D 6
9117 L10

7-2

1101 A1	2106 C2	2137 C5	3147 B5	3172 C5	5112 C4	5127 B4	7102 A3	9117 B2	9129 B3
1102 A1	2107 C2	2138 A5	3149 C5	3173 A5	5113 B3	5130 A3	7104 C2	9118 B4	9130 C3
1103 C1	2110 C2	2140 B5	3152 A5	5102 C2	5114 C4	5131 A3	7105 C3	9119 C4	9131 A5
1104 B1	2115 C1	2144 B5	3154 C5	5103 C2	5115 A4	6101 A2	7107 B3	9120 B4	9133 C3
1105 A1	2123 A2	2148 B4	3157 B5	5104 C2	5116 A4	6102 A1	9100 A2	9121 A2	9134 B3
1119 C5	2125 A2	2155 A3	3158 A5	5105 B2	5120 B4	6103 A1	9101 B3	9122 C3	9136 A5
1120 A5	2128 C3	2162 A2	3159 A5	5106 B2	5121 B4	6104 A2	9105 B2	9123 B1	9137 A5
1130 B5	2129 C4	3105 B3	3160 A5	5108 C4	5122 B3	6106 B3	9111 C2	9124 C4	
1131 B5	2130 A4	3110 A2	3161 A5	5109 B4	5123 B2	6107 C5	9113 B2	9125 A3	
2104 A2	2133 A4	3132 B3	3170 C5	5110 B4	5124 B2	6109 C2	9114 B2	9126 B5	
2105 A1	2135 B5	3142 A4	3171 C5	5111 C3	5126 B3	6120 C4	9115 B3	9128 A2	

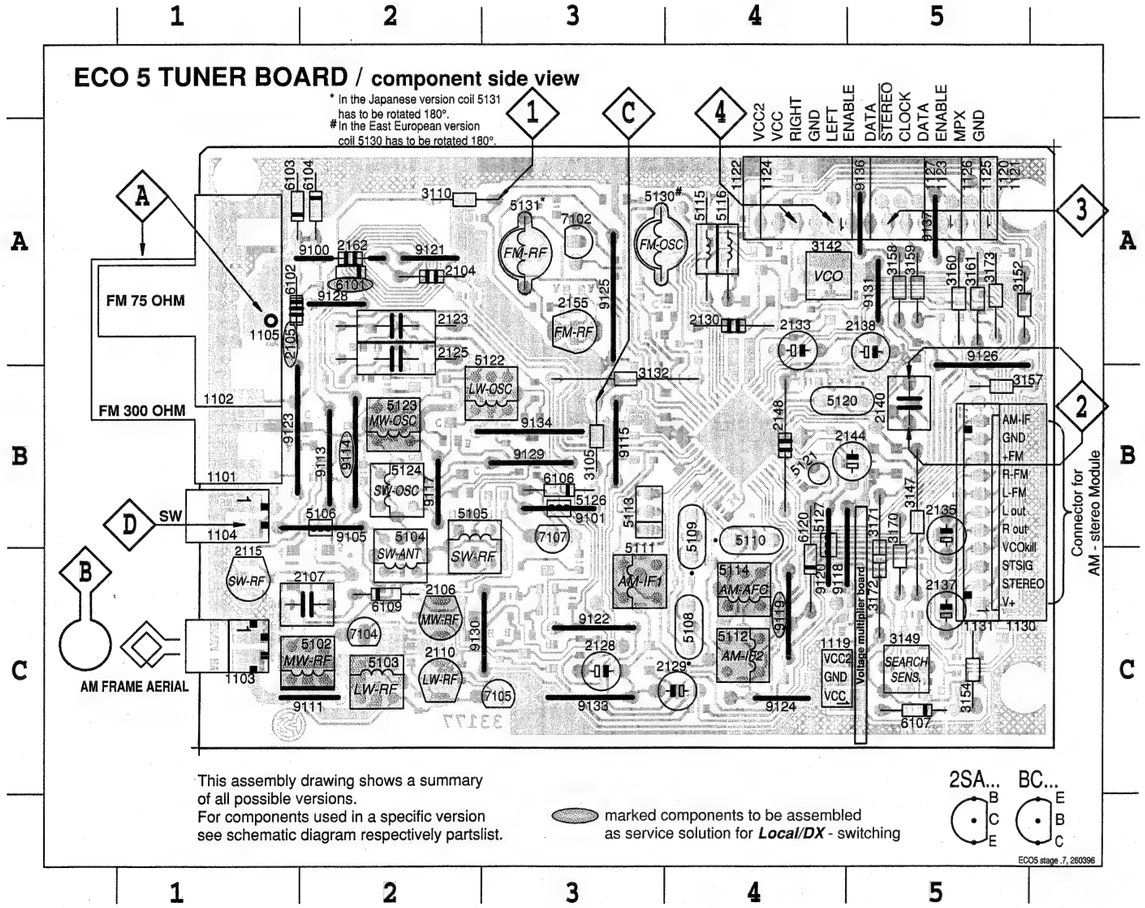

2101 C4	2119 B4	2141 B1	2154 C3	3101 C3	3116 A3	3133 B4	3153 C2	4101 A4	4120 C2	4160 A1	7106 A4		
2102 C4	2120 B4	2142 B1	2156 C4	3102 C3	3117 B4	3134 B4	3155 A2	4102 A4	4150 B2	4161 A1	7108 A3		
2103 C3	2122 B3	2143 A1	2157 B4	3103 C3	3118 B3	3136 B4	3156 A1	4103 C2	4151 B3	4162 C1	7109 A3		
2108 A4	2124 A5	2145 C1	2158 B4	3104 B3	3120 B4	3137 B4	3167 C2	4104 A2	4152 B3	4163 C1	7111 A1		
2109 A4	2126 C2	2146 C1	2159 C2	3106 C4	3121 A3	3140 B1	3168 B3	4105 B3	4153 B4	6105 A4	7120 B4		
2112 B5	2127 C2	2147 C1	2160 C4	3108 A4	3122 B3	3141 C2	3169 B2	4106 B4	4154 C3	6110 A4	7121 B3		
2113 A4	2131 C2	2149 B2	2161 A3	3109 A4	3123 A3	3143 C2	3175 A2	4107 C4	4155 A4	6111 B4	7122 B4		
2114 A4	2132 C1	2150 B2	2163 A2	3111 A3	3125 A3	3144 C2	3176 C2	4108 B4	4156 A2	6130 C2	7123 B4		
2116 B3	2134 C1	2151 C2	2165 B3	3112 A3	3126 B3	3145 C2	3177 A1	4109 A3	4157 B3	6131 C3	7124 C4		
2117 A3	2136 B1	2152 C3	2166 B2	3114 A3	3127 B3	3146 A1	3178 A1	4110 A3	4158 C2	7101 B2	7125 A1		
2118 B4	2139 B2	2153 C3	2167 B2	3115 A3	3128 B3	3148 A1	3179 A1	4111 C1	4159 A2	7103 C2			

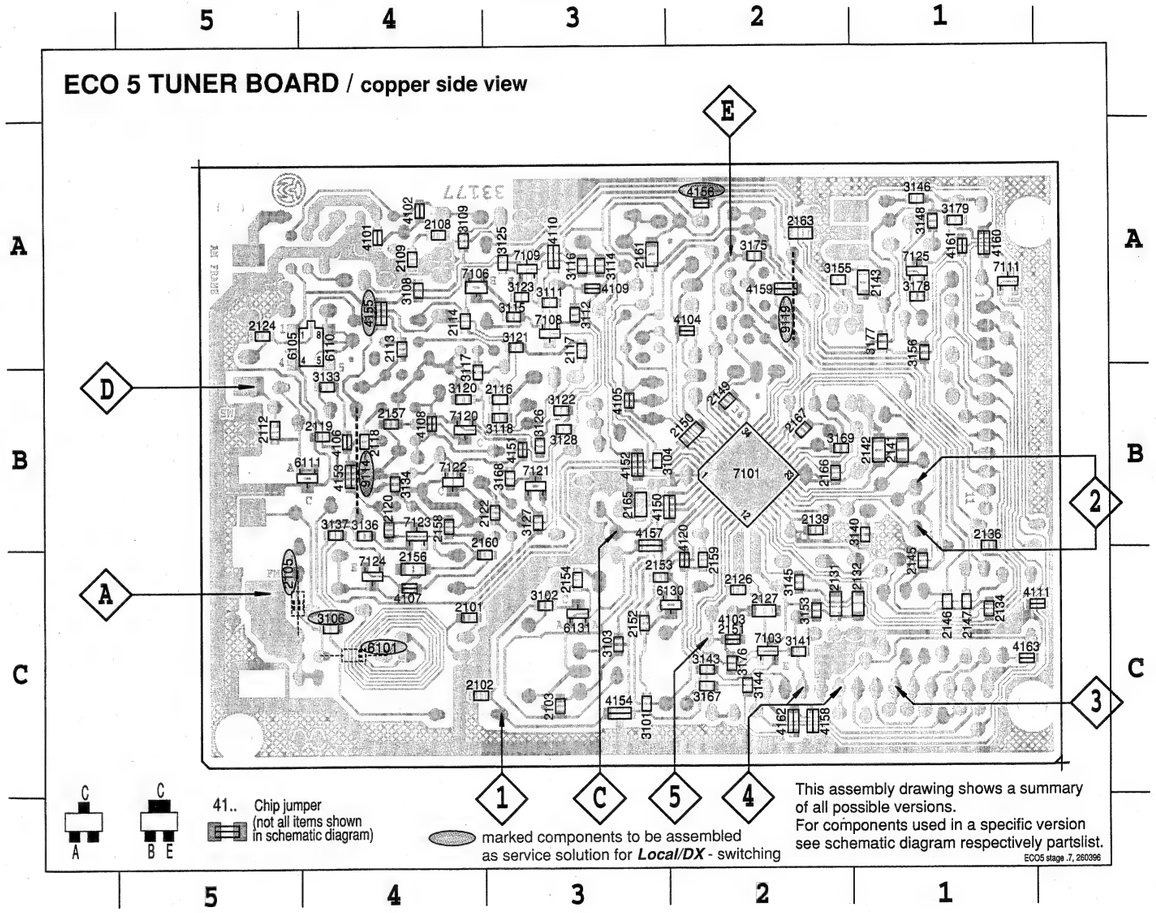

TUNER ADJUSTMENT TABLE (ECO5 FM/MW- and FM/MW/LW - versions with AM-frame aerial)

Waverange	Input frequency	Input	Tuned to	Adjust	Output	Scope/Voltmeter
VARICAP ALIGNMENT						
FM			108MHz	5130		8V ±0.2V
87.5 - 108MHz			87.5MHz	check		4.3V ±0.5V
MW FM/AM-version, 10kHz grid			1700kHz	5123		8V ±0.2V
530 - 1700kHz			530kHz	check	◇1	1.1V ±0.4V
LW			279kHz	5122		8V ±0.2V
153 - 279kHz			153kHz	check		1.1V ±0.4V
MW FM/MW/LW- and FM/MW-version (9kHz grid)			1602kHz	5123		8V ±0.2V
531 - 1602kHz			531kHz	check		1.1V ±0.4V
FM RF						
FM	108MHz	◇A	108MHz	2155	◇4	MAX
87.5 - 108MHz	87.5MHz	mod=1kHz Δf=±22.5kHz	87.5MHz	5131		
VCO						
FM	98MHz, 1mV continuous wave	◇A	98MHz	3142	◇3	152kHz ±1kHz [1]
AM IF						
MW	450kHz connect pin 26 of IC 7101 (AM Osc.) with short wire to ground (pin 4)	◇C Δf=±15kHz V_{RF} = 3mV	IC 7101 36 — 100nF / 220R; IC 7101 40 — 100nF / 220R (see remark 2)	5111	◇4	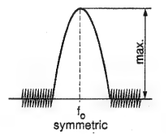
				5112		
AM AFC **MW**		◇C continuous wave V_{RF} = 10mV		5114	◇2	0 ± 2 mV DC
AM RF [3]						
MW [4] FM/MW/LW- and FM/MW-version (9kHz grid)	1494kHz	◇B Δf = ±30kHz V_{RF} as low as possible	1494kHz	2106	◇4	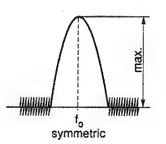
531 - 1602kHz	558kHz		558kHz	5102		
LW	198kHz		198kHz	5103		
MW FM/AM-version, 10kHz grid	1500kHz		1500kHz	2106		
530 - 1700kHz	560kHz		560kHz	5102		

ECO5, 020995

Use service test program. By selecting the TUNER TEST test frequencies will be stored as preset frequencies automatically.

[1] If sensitivity of frequency counter is too low adjust to max. channel separation (input signal: stereo left 90% + 9%, adjust output on right channel to minimum)

[2] RC network serves for damping the IF-filter while adjusting the other one.

[3] For AM RF adjustments the original frame antenna has to be used !

[4] MW has to be aligned before LW.

↕ Repeat

7-2-1

Layout stage 3103 303 3380.1

1101 A1	2106 C2	2137 C5	3147 B5	3172 C5	5113 B3	5130 A3	7104 C2	9117 B2	9129 B3		
1102 A1	2107 C2	2138 A5	3149 C5	3173 A5	5114 C4	5131 A3	7105 C3	9118 B4	9130 C3		
1103 C1	2110 C2	2140 B5	3152 A5	5102 C2	5115 A4	6101 A2	7107 B3	9119 C4	9131 A5		
1104 B1	2115 C1	2144 B5	3154 C5	5103 C2	5116 A4	6102 A1	7119 C4	9120 B4	9133 C3		
1105 A1	2123 A2	2148 B4	3157 B5	5104 C2	5120 B4	6103 A1	9100 A2	9121 A2	9134 B3		
1119 C5	2125 A2	2155 A3	3158 A5	5105 B2	5121 B4	6104 A2	9101 B3	9122 C3	9136 A5		
1120 A5	2128 C3	2162 A2	3159 A5	5106 B2	5122 B3	6106 B3	9105 B2	9123 B1	9137 A5		
1130 B5	2129 C4	3105 B3	3160 A5	5109 B4	5123 B2	6107 C5	9111 C2	9124 C4			
1131 B5	2130 A4	3110 A2	3161 A5	5110 B4	5124 B2	6109 C2	9113 B2	9125 A3			
2104 A2	2133 A4	3132 B3	3170 C5	5111 C3	5126 B3	6120 C4	9114 B2	9126 B5			
2105 A1	2135 B5	3142 A4	3171 C5	5112 C4	5127 B4	7102 A3	9115 B3	9128 A2			

2101 C4	2118 B4	2139 B2	2153 C3	2166 B2	3113 A2	3125 A3	3144 C2	3176 C2	4108 B4	4156 A2	6130 C2	7123 E	
2102 C4	2119 B4	2141 B1	2154 C3	2167 B2	3114 A3	3126 B3	3145 C2	3177 A1	4109 A3	4157 B3	6131 C3	7124 C	
2103 C3	2120 B4	2142 B1	2156 C4	3101 C3	3115 A3	3127 B3	3146 A1	3178 A1	4110 A3	4158 C2	7101 B2	7125 A	
2108 A4	2122 B3	2143 A1	2157 B4	3102 C3	3116 A3	3128 B3	3148 A1	3179 A1	4111 C1	4159 A2	7103 C2		
2109 A4	2124 A5	2145 C1	2158 B4	3103 C3	3117 B4	3133 B4	3153 C2	4101 A4	4120 C2	4160 A1	7106 A4		
2111 A2	2126 C2	2146 C1	2159 C2	3104 B3	3118 B3	3134 B4	3155 A2	4102 A4	4150 B2	4161 A1	7108 A3		
2112 B5	2127 C2	2147 C1	2160 C4	3106 C4	3119 A3	3136 B4	3156 A1	4103 C2	4151 B3	4162 C1	7109 A3		
2113 A4	2131 C2	2149 B2	2161 A3	3108 A4	3120 B4	3137 B4	3167 C2	4104 A2	4152 B3	4163 C1	7111 A1		
2114 A4	2132 C1	2150 B2	2163 A2	3109 A4	3121 A3	3140 B1	3168 B3	4105 B3	4153 B4	6105 A4	7120 B4		
2116 B3	2134 C1	2151 C2	2164 B1	3111 A3	3122 B3	3141 C2	3169 B2	4106 B4	4154 C3	6110 A4	7121 B3		
2117 A3	2136 B1	2152 C3	2165 B3	3112 A3	3123 A3	3143 C2	3175 A2	4107 C4	4155 A4	6111 B4	7122 B4		

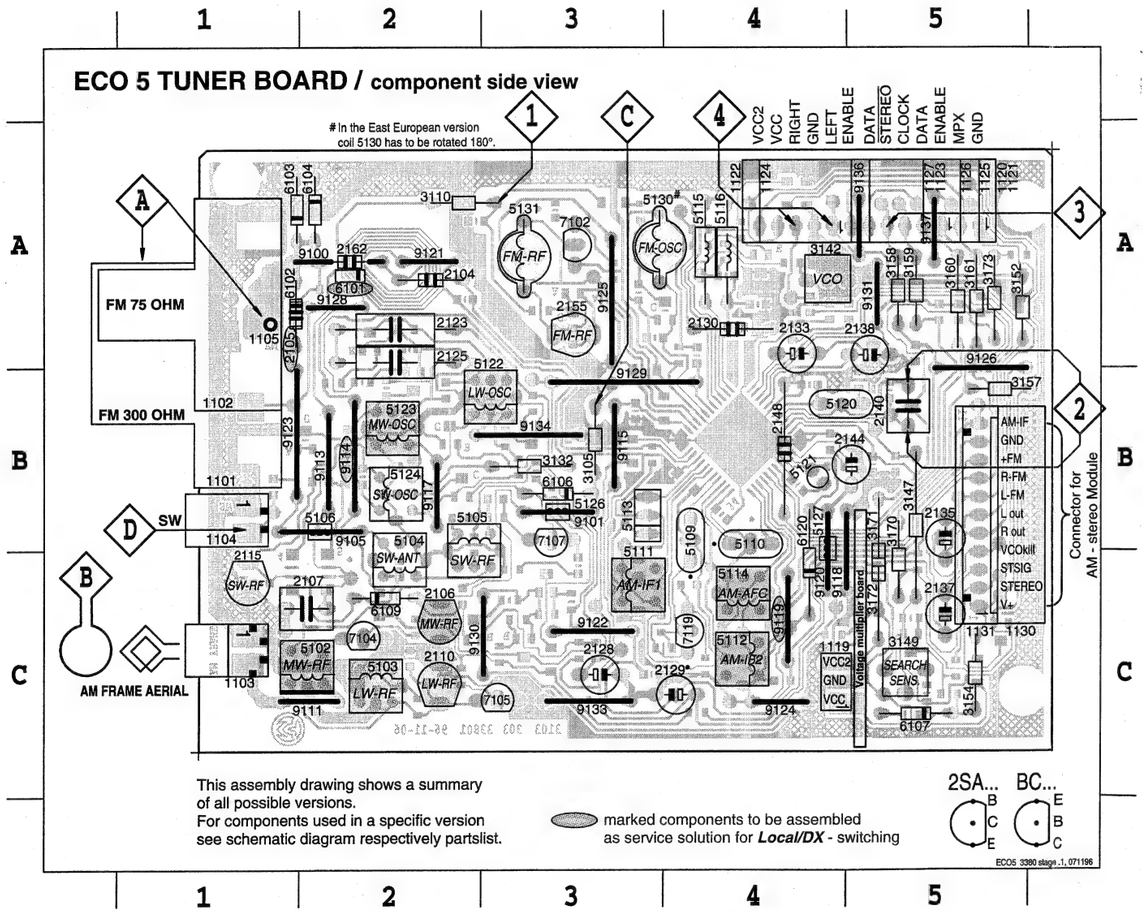

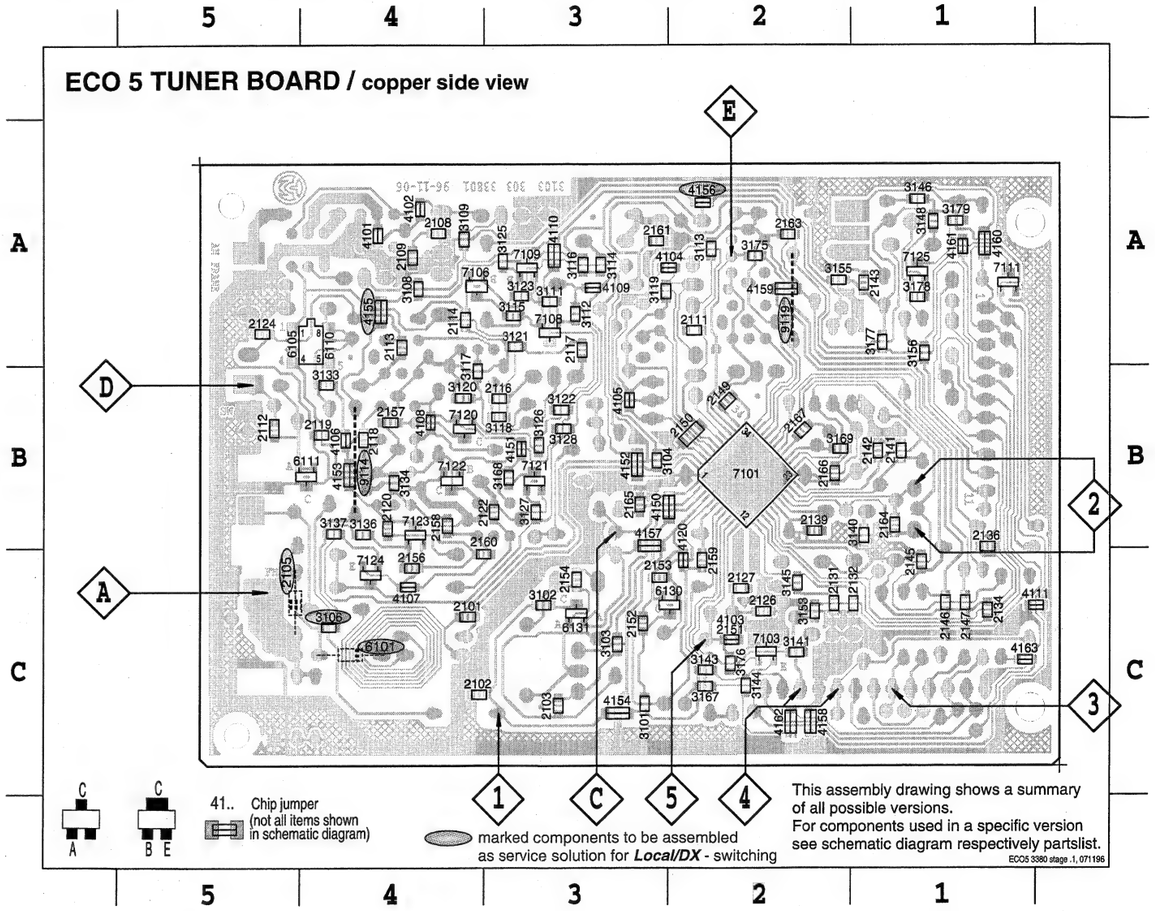

TUNER ADJUSTMENT TABLE (ECO5 FM/MW- and FM/MW/LW - versions with AM-frame aerial)

Waverange	Input frequency	Input	Tuned to	Adjust	Output	Scope/Voltmeter
VARICAP ALIGNMENT						
FM 87.5 - 108MHz (65.81 - 74, 87.5 - 108MHz)			108MHz	5130	◇1	8V ±0.2V
			87.5MHz (65.81MHz)	check		4.3V ±0.5V (1.2V ±0.5V)
MW FM/AM-version, 10kHz grid 530 - 1700kHz			1700kHz	5123		8V ±0.2V
			530kHz	check		1.1V ±0.4V
FM/MW-version, 9kHz grid 531 - 1602kHz			1602kHz	5123		6.9V ±0.2V
			531kHz	check		1.1V ±0.4V
LW 153 - 279kHz			279kHz	5122		8V ±0.2V
			153kHz	check		1.1V ±0.4V
MW FM/MW/LW- version, 9kHz grid 531 - 1602kHz			1602kHz	5123		8V ±0.2V
			531kHz	check		1.1V ±0.4V
FM RF						
FM 87.5 - 108MHz (65.81 - 74, 87.5 - 108MHz)	108MHz	◇A mod=1kHz Δf=±22.5kHz	108MHz	2155	◇4	MAX
	87.5MHz (65.81MHz)		87.5MHz (65.81MHz)	5131		
VCO						
FM	98MHz, 1mV continuous wave	◇A	98MHz	3142	◇3	152kHz ±1kHz [1]
AM IF						
MW	450kHz connect pin 26 of IC 7101 (AM Osc.) with short wire to ground (pin 4)	◇C Δf=±15kHz V_{RF} = 3mV	IC 7101 36 — 100nF — 220R	5111	◇4	max. f_o symmetric
			IC 7101 40 — 100nF — 220R see remark [2]	5112		
AM AFC **MW**		◇C continuous wave V_{RF} = 10mV		5114	◇2	0 ± 2 mV DC
AM RF [3]						
MW [4] FM/MW/LW- and FM/MW-version (9kHz grid) 531 - 1602kHz	1494kHz	◇B Δf = ±30kHz V_{RF} as low as possible	1494kHz	2106	◇4	max. f_o symmetric
	558kHz		558kHz	5102		
LW	198kHz		198kHz	5103		
MW FM/AM-version, 10kHz grid 530 - 1700kHz	1500kHz		1500kHz	2106		
	560kHz		560kHz	5102		

ECO5, 170996

Use service test program. By selecting the TUNER TEST test frequencies will be stored as preset frequencies automatically.

1) If sensitivity of frequency counter is too low adjust to max. channel separation (input signal: stereo left 90% + 9%, adjust output on right channel to minimum)

2) RC network serves for damping the IF-filter while adjusting the other one.

3) For AM RF adjustments the original frame antenna has to be used !

4) MW has to be aligned before LW.

7-3

TUNER BOARD ECO5 / PA (FM/MW/SW)

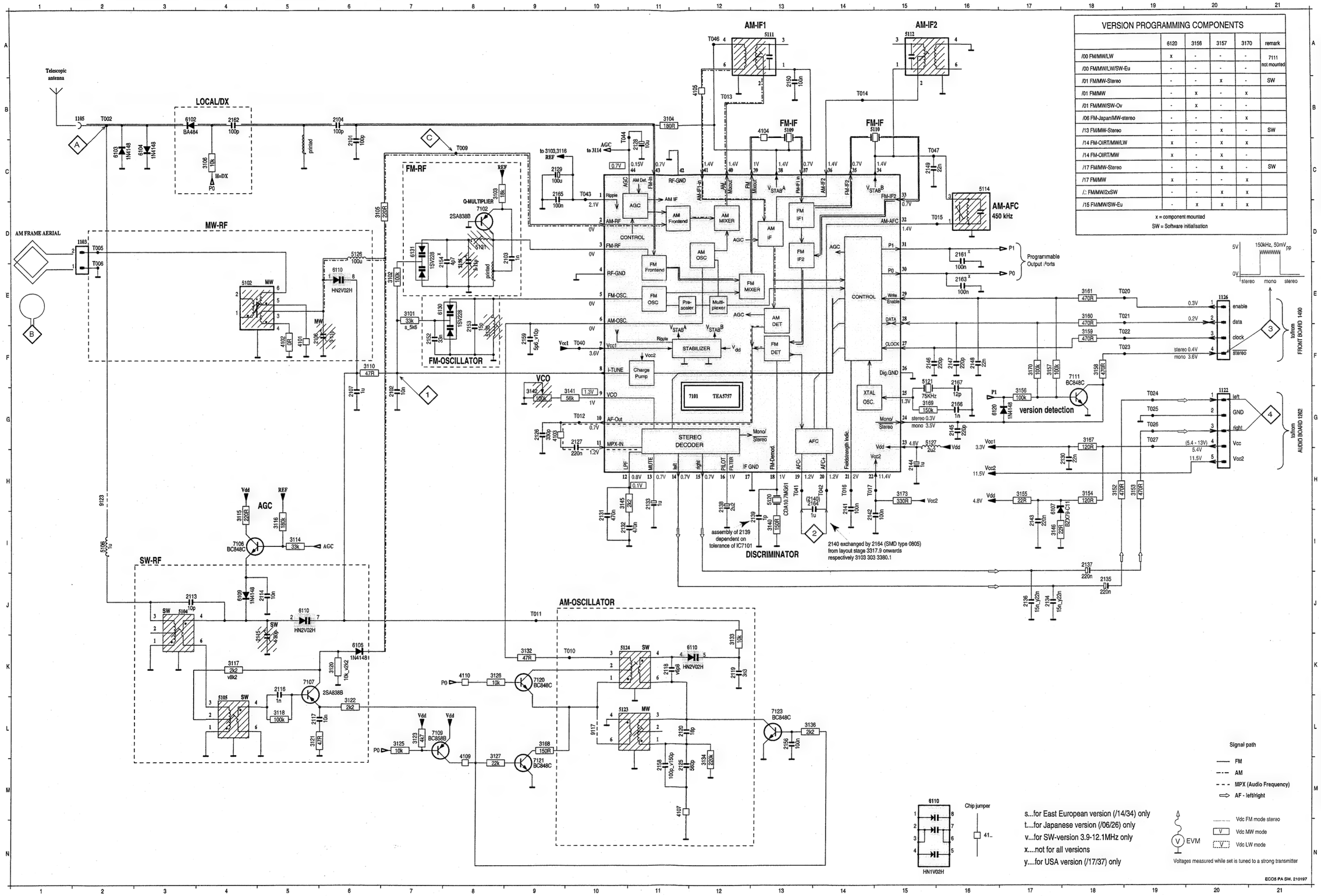

1103 D 2
1105 B 2
1122 G20
1126 E20
2101 C 6
2102 G 7
2103 D 9
2104 B 6
2106 F 5
2107 G 6
2113 J 3
2114 J 5
2115 K 5
2116 K 5
2117 L 5
2118 K11
2119 K12
2120 L11
2125 M11
2126 G 9
2127 G10
2128 C11
2129 C 9
2130 H18
2131 I10
2132 I10
2133 H11
2134 J17
2135 J18
2136 J17
2137 I18
2138 H12
2139 I13
2140 H14
2141 H14
2142 I14
2143 I17
2144 H15
2145 G16
2146 F15
2147 F16
2148 F18
2149 C15
2150 B13
2152 F 7
2153 F 8
2154 E 7
2155 D 8
2156 L13
2158 M11
2159 F 9
2161 D16
2162 C 4
2163 E16
2164 H14
2165 C 9
2166 G16
2167 F16
3101 E 7
3102 E 7
3103 C 8
3104 B11
3105 D 6
3106 C 4
3110 F 6
3114 I 5
3115 I 4
3116 I 5
3117 K 4
3118 L 5
3120 K 6
3121 L 5
3122 L 6
3123 L 7
3125 L 7
3126 K 8
3127 M 8
3132 K 9
3133 K12
3134 M12
3136 L13
3140 I13
3141 G10
3142 G 9
3145 H10
3146 I17
3152 H18
3153 H19
3154 H18
3155 H17
3156 G17
3157 G18
3158 F18
3159 F16
3160 E18
3161 E18
3167 G17
3168 L 9
3169 G15
3170 F17
3173 H15
4101 F 5
4102 F 5
4103 G 9
4104 B13
4105 B12
4107 M11
4109 M 8
4110 K 8
5102 E 4
5104 J 3
5105 L 4
5106 I 2
5109 B13
5110 B14
5111 A13
5112 A15
5114 C16
5120 H13
5121 F15
5123 L11
5124 K10
5126 D 9
5127 G15
5130 F 8
5131 D 8
6102 C 3
6103 C 2
6104 C 3
6106 K 6
6107 H17
6109 J 4
6110 E 6
6110 J 5
6110 K12
6120 G16
6130 E 7
6131 D 7
7101 G11
7102 D 8
7106 I 4
7107 K 5
7109 L 7
7111 F19
7120 K 9
7121 M 9
7123 L13
9117 L10
9123 H 2

7-4

Layout stage 3103 303 3380.1

1101 A1	2106 C2	2137 C5	3147 B5	3172 C5	5113 B3	5130 A3	7104 C2	9117 B2	9129 B3	
1102 A1	2107 C2	2138 A5	3149 C5	3173 A5	5114 C4	5131 A3	7105 C3	9118 B4	9130 C3	
1103 C1	2110 C2	2140 B5	3152 A5	5102 C2	5115 A4	6101 A2	7107 B3	9119 C4	9131 A5	
1104 B1	2115 C1	2144 B5	3154 C5	5103 C2	5116 A4	6102 A1	7119 C4	9120 B4	9133 C3	
1105 A1	2123 A2	2148 B4	3157 B5	5104 C2	5120 B4	6103 A1	9100 A2	9121 A2	9134 B3	
1119 C5	2125 A2	2155 A3	3158 A5	5105 B2	5121 B4	6104 A2	9101 B3	9122 C3	9136 A5	
1120 A5	2128 C3	2162 A2	3159 A5	5106 B2	5122 B3	6106 B3	9105 B2	9123 B1	9137 A5	
1130 B5	2129 C4	3105 B3	3160 A5	5109 B4	5123 B2	6107 C5	9111 C2	9124 C4		
1131 B5	2130 A4	3110 A2	3161 A5	5110 B4	5124 B2	6109 C2	9113 B2	9125 A3		
2104 A2	2133 A4	3132 B3	3170 C5	5111 C3	5126 B3	6120 C4	9114 B2	9126 B5		
2105 A1	2135 B5	3142 A4	3171 C5	5112 C4	5127 B4	7102 A3	9115 B3	9128 A2		

2101 C4	2118 B4	2139 B2	2153 C3	2166 B2	3113 A2	3125 A3	3144 C2	3176 C2	4108 B4	4156 A2	6130 C2	7123 B
2102 C4	2119 B4	2141 B1	2154 C3	2167 B2	3114 A3	3126 B3	3145 C2	3177 A1	4109 A3	4157 B3	6131 C3	7124 C
2103 C3	2120 B4	2142 B1	2156 C4	3101 C3	3115 A3	3127 B3	3146 A1	3178 A1	4110 A3	4158 C2	7101 B2	7125 A
2108 A4	2122 B3	2143 A1	2157 B4	3102 C3	3116 A3	3128 B3	3148 A1	3179 A1	4111 C1	4159 A2	7103 C2	
2109 A4	2124 A5	2145 C1	2158 B4	3103 C3	3117 B4	3133 B4	3153 C2	4101 A4	4120 C2	4160 A1	7106 A4	
2111 A2	2126 C2	2146 C1	2159 C2	3104 B3	3118 B3	3134 B4	3155 A2	4102 A4	4150 B2	4161 A1	7108 A3	
2112 B5	2127 C2	2147 C1	2160 C4	3106 C4	3119 A3	3136 B4	3156 A1	4103 C2	4151 B3	4162 C1	7109 A3	
2113 A4	2131 C2	2149 B2	2161 A3	3108 A4	3120 B4	3137 B4	3167 C2	4104 A2	4152 B3	4163 C1	7111 A1	
2114 A4	2132 C1	2150 B2	2163 A2	3109 A4	3121 A3	3140 B1	3168 B3	4105 B3	4153 B4	6105 A4	7120 B4	
2116 B3	2134 C1	2151 C2	2164 B1	3111 A3	3122 B3	3141 C2	3169 B2	4106 B4	4154 C3	6110 A4	7121 B3	
2117 A3	2136 B1	2152 C3	2165 B3	3112 A3	3123 A3	3143 C2	3175 A2	4107 C4	4155 A4	6111 B4	7122 B4	

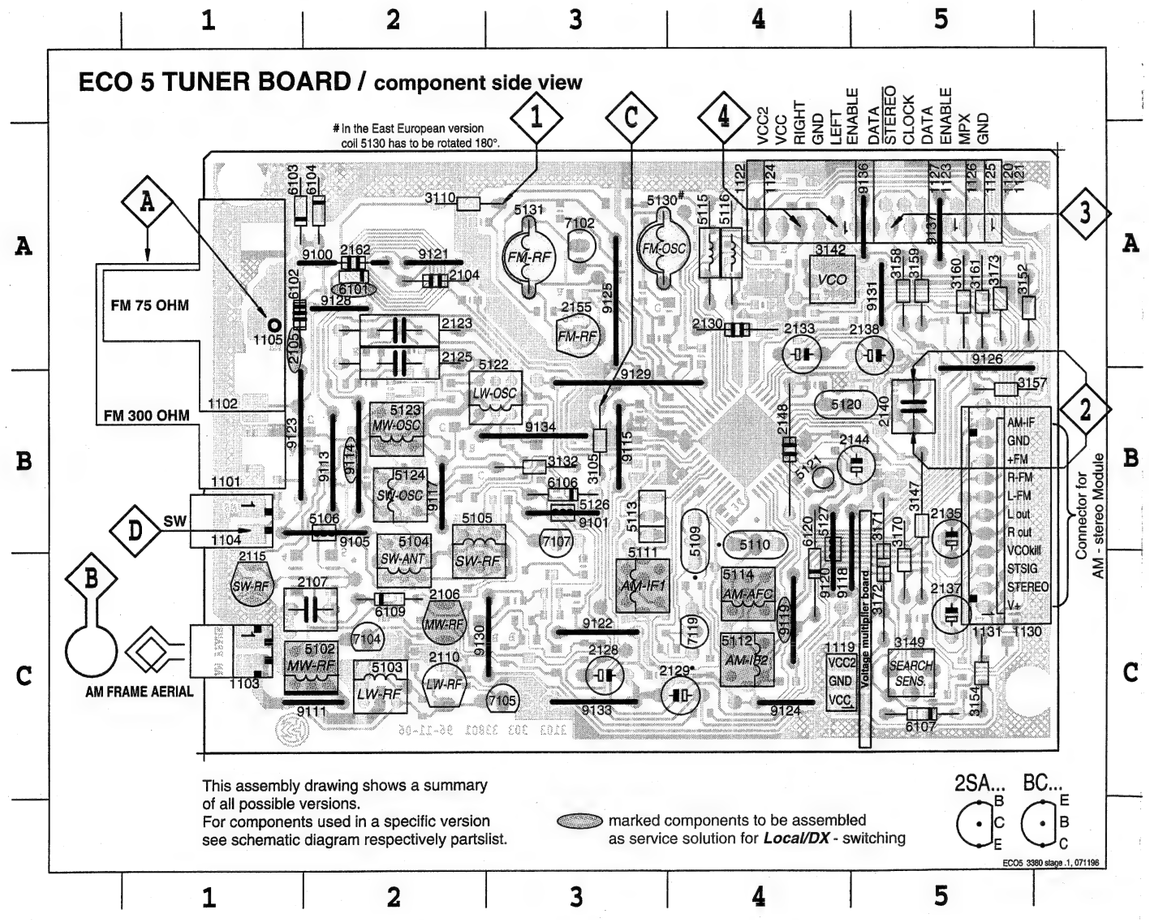

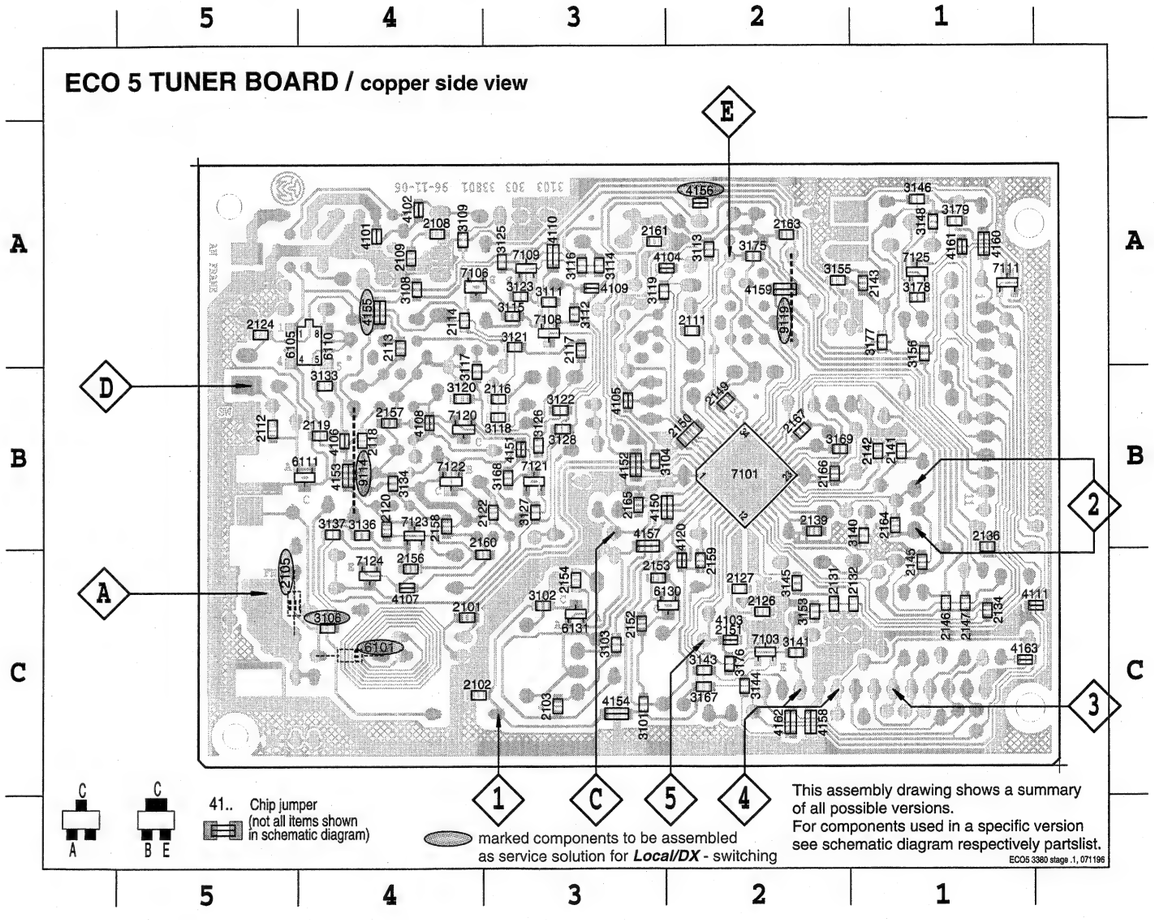

TUNER ADJUSTMENT TABLE (ECO5 FM/MW/SW - versions with MW-frame aerial)

Waverange	Input frequency	Input	Tuned to	Adjust	Output	Scope/Voltmeter
VARICAP ALIGNMENT						
FM			108MHz	5130		8V ±0.2V
87.5 - 108MHz			87.5MHz	check		4.3V ±0.5V
MW			1700kHz	5123	◇1	8V ±0.2V
530 - 1700kHz			530kHz	check		1.1V ±0.4V
SW			12.1MHz	5124		8V ±0.2V
3.9 - 12.1MHz			3.9MHz	check		1.1V ±0.4V
FM RF						
FM 87.5 - 108MHz	108MHz	◇A mod=1kHz Δf=±22.5kHz	108MHz	2155	◇4	MAX
	87.5MHz		87.5MHz	5131		
VCO						
FM	98MHz, 1mV continuous wave	◇A	98MHz	3142	◇3	152kHz ±1kHz [1]
AM IF						
MW	450kHz connect pin 26 of IC 7101 (AM Osc.) with short wire to ground (pin 4)	◇C Δf=±15kHz V_{RF} = 3mV	IC 7101 36 — 100nF / 220Ω	5111	◇4	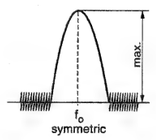
			IC 7101 40 — 100nF / 220Ω (see remark 2)	5112		
AM AFC **MW**		◇C continuous wave V_{RF} = 10mV		5114	◇2	0 ± 2 mV DC
AM RF [3]						
MW 530 - 1700kHz	1500kHz	◇B Δf = ±30kHz V_{RF} as low as possible	1500kHz	2106	◇4	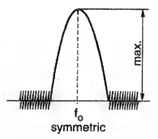
	560kHz		560kHz	5102		
SW [4] 3.9 - 12.1MHz	11MHz	10pF — ◇A — 50Ω	11MHz	2115		
	4.2MHz		4.2MHz	5105		

ECO5 PA, 040696

Use service test program. By selecting the TUNER TEST test frequencies will be stored as preset frequencies automatically.

1) If sensitivity of frequency counter is too low adjust to max. channel separation (input signal: stereo left 90% + 9%, adjust output on right channel to minimum)

2) RC network serves for damping the IF-filter while adjusting the other one.

3) For MW adjustments the original frame antenna has to be used !

4) Align 5104 to max. inductivity first (core completely screwed in).

↕ Repeat

8-1

AUDIO BOARD / Copperside view (stage .4)

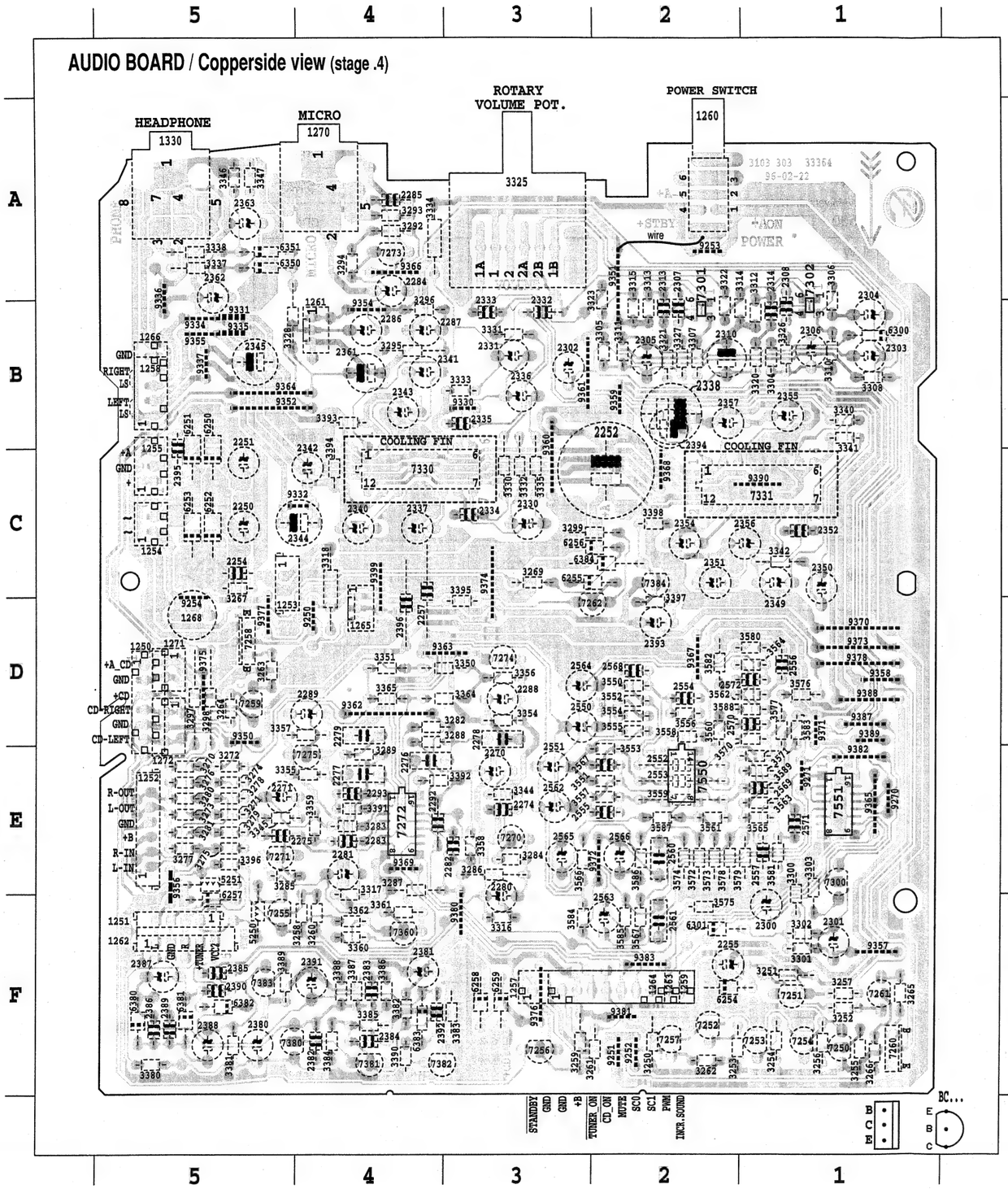

1250	D 5	2355	B 1	3286	E 3	3393	B 4	7271	E 5
1251	F 5	2356	C 1	3287	E 4	3394	C 4	7273	A 4
1252	E 5	2357	B 2	3288	D 4	3395	D 3	7274	D 3
1253	C 5	2361	B 4	3289	E 4	3396	E 5	7275	E 4
1254	C 5	2362	A 5	3292	A 4	3397	D 2	7300	E 1
1255	C 5	2363	A 5	3293	A 4	3398	C 2	7330	C 4
1257	F 2	2380	F 5	3294	A 4	3550	D 2	7331	C 1
1258	B 5	2381	F 4	3295	B 4	3551	E 2	7360	F 4
1259	F 2	2382	F 4	3296	B 4	3552	D 2	7380	F 5
1260	A 2	2383	F 4	3297	D 5	3553	E 2	7381	F 4
1261	B 4	2384	F 4	3298	D 5	3554	D 2	7382	F 4
1262	F 5	2385	F 5	3299	C 2	3555	D 2	7383	F 5
1263	F 2	2386	F 5	3300	F 1	3556	D 2	7384	C 2
1264	F 2	2387	F 5	3301	F 1	3557	E 2	9250	D 4
1265	D 4	2388	F 5	3302	F 1	3558	D 2	9251	F 2
1266	B 5	2389	F 5	3303	E 1	3559	E 2	9252	F 2
1268	D 5	2390	F 5	3304	B 1	3560	D 2	9253	A 2
1270	A 4	2391	F 4	3305	B 2	3561	E 2	9254	D 5
1271	D 5	2392	F 4	3306	B 1	3562	D 1	9270	E 1
1272	D 5	2393	D 2	3307	B 2	3563	E 1	9271	E 1
1330	A 5	2394	B 2	3308	B 1	3564	D 1	9330	B 3
2250	C 5	2395	B 5	3310	B 1	3565	E 1	9331	B 5
2251	C 5	2396	D 4	3311	B 2	3566	E 3	9332	C 4
2252	C 2	2550	D 3	3312	B 1	3567	F 2	9334	B 5
2254	C 5	2551	E 3	3313	B 2	3570	D 1	9335	B 5
2255	F 2	2552	E 2	3314	B 2	3571	E 1	9336	A 5
2257	C 4	2553	E 2	3315	B 2	3572	E 2	9337	B 5
2270	E 3	2554	D 2	3316	F 3	3573	E 2	9350	D 5
2271	E 5	2555	E 2	3317	F 4	3574	E 2	9351	A 2
2274	E 3	2556	D 1	3318	C 4	3575	F 2	9352	B 5
2275	E 5	2557	E 1	3320	B 1	3576	D 1	9354	B 4
2276	E 4	2560	E 2	3321	B 2	3577	D 1	9355	B 5
2277	E 4	2561	F 2	3322	B 2	3578	E 2	9356	E 5
2278	D 3	2562	E 3	3323	B 2	3579	E 1	9357	F 1
2279	D 4	2563	F 2	3325	A 3	3580	D 1	9358	D 1
2280	F 3	2564	D 3	3326	B 1	3581	E 1	9359	B 2
2281	E 4	2565	E 3	3327	B 2	3582	D 2	9360	C 3
2282	E 3	2566	E 2	3328	B 5	3583	D 1	9361	B 3
2283	E 4	2567	E 2	3330	C 3	3584	F 3	9362	D 4
2284	A 4	2568	D 2	3331	B 3	3585	F 2	9363	D 4
2285	A 4	2569	E 1	3332	C 3	3586	E 2	9364	B 5
2286	B 4	2570	D 1	3333	B 3	3587	E 2	9365	E 1
2287	B 4	2571	E 1	3334	A 4	3588	D 1	9366	A 4
2288	D 3	2572	D 1	3335	C 3	3589	E 1	9367	D 2
2289	D 4	3250	F 2	3337	A 5	5250	F 5	9368	C 2
2292	E 4	3251	F 1	3338	A 5	5251	E 5	9369	E 4
2293	E 4	3252	F 1	3340	B 1	6250	C 5	9370	D 1
2300	F 1	3253	F 2	3341	B 1	6251	C 5	9371	D 1
2301	F 1	3254	F 1	3342	C 1	6252	C 5	9372	E 2
2302	B 3	3255	F 1	3344	E 3	6253	C 5	9373	D 1
2303	B 1	3256	F 1	3345	E 5	6254	F 2	9374	C 3
2304	B 1	3257	F 1	3346	A 5	6255	C 3	9375	D 5
2305	B 2	3258	F 4	3347	A 5	6256	C 2	9376	F 3
2306	B 1	3259	F 3	3350	D 4	6257	F 5	9377	D 5
2307	B 2	3260	F 4	3351	D 4	6258	F 3	9378	D 1
2308	B 1	3261	F 2	3354	D 3	6259	F 3	9380	F 3
2310	B 2	3262	F 2	3355	E 4	6300	B 1	9381	F 2
2313	B 2	3263	D 5	3356	D 3	6301	F 2	9382	E 1
2314	B 1	3264	D 5	3357	D 4	6350	A 5	9383	F 2
2330	C 3	3265	F 1	3358	E 3	6351	A 5	9387	D 1
2331	B 3	3266	F 1	3359	E 4	6380	F 5	9388	D 1
2332	B 3	3267	C 5	3360	F 4	6381	F 5	9389	D 1
2333	B 3	3269	C 3	3361	F 4	6382	F 5	9390	C 1
2334	C 3	3270	E 5	3362	F 4	6383	F 4	9399	C 4
2335	B 3	3271	E 5	3364	D 4	6384	C 2		
2336	B 3	3272	E 5	3365	D 4	7250	F 1		
2337	C 4	3273	E 5	3380	F 5	7251	F 1		
2338	B 2	3274	E 5	3381	F 5	7252	F 2		
2340	C 4	3275	E 5	3382	F 4	7253	F 1		
2341	B 4	3276	E 5	3383	F 3	7254	F 1		
2342	C 4	3277	E 5	3384	F 4	7255	F 5		
2343	B 4	3278	E 5	3385	F 4	7256	F 3		
2344	C 4	3279	E 5	3386	F 4	7257	F 2		
2345	B 5	3280	E 5	3387	F 4	7258	D 5	7272	E 4
2349	C 1	3281	E 5	3388	F 4	7259	D 5	7301	B 2
2350	C 1	3282	D 4	3389	F 5	7260	F 1	7302	B 1
2351	C 2	3283	E 4	3390	F 4	7261	F 1	7550	E 2
2352	C 1	3284	E 3	3391	E 4	7262	D 3	7551	E 1
2354	C 2	3285	E 5	3392	E 4	7270	E 3		

This assembly drawing shows a summary
of all possible versions.
For components used in a specific version
see schematic diagram respectively partslist.

Jawol Audio 4, 190496

AUDIO BOARD / Componentside view (stage .4)

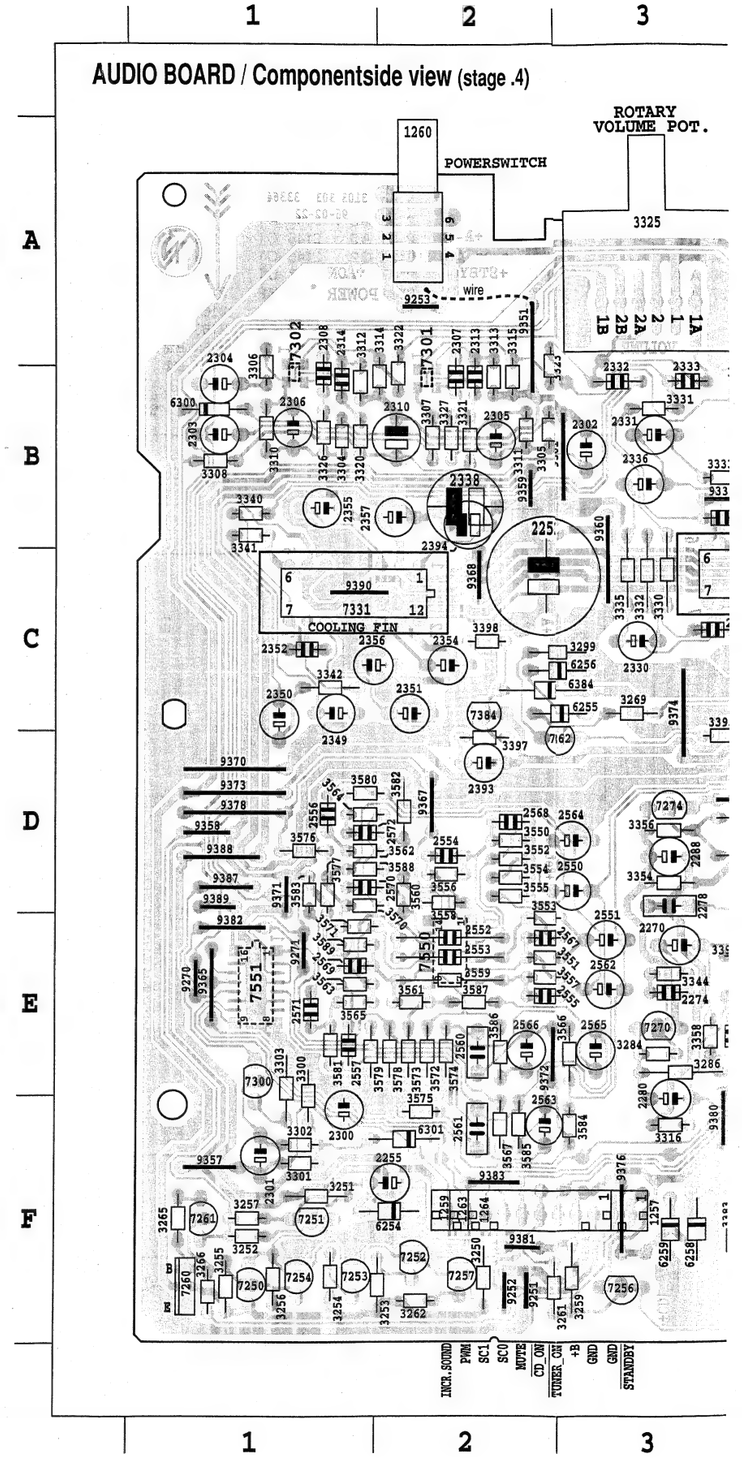

This assembly drawing shows a summary
of all possible versions.
For components used in a specific version
see schematic diagram respectively partslist.

8-1

AUDIO BOARD / Componentside view (stage .4)

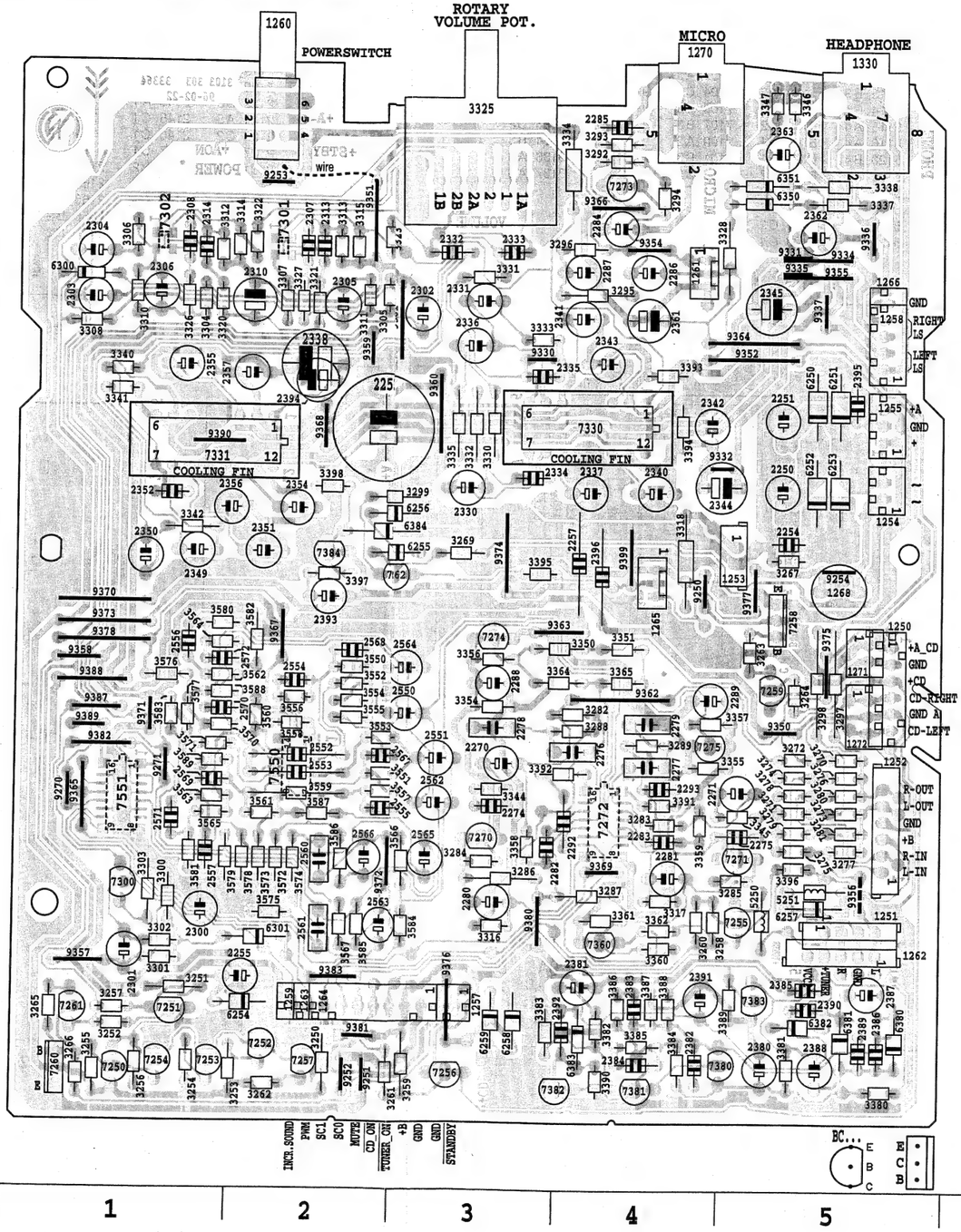

| | | |

8-2

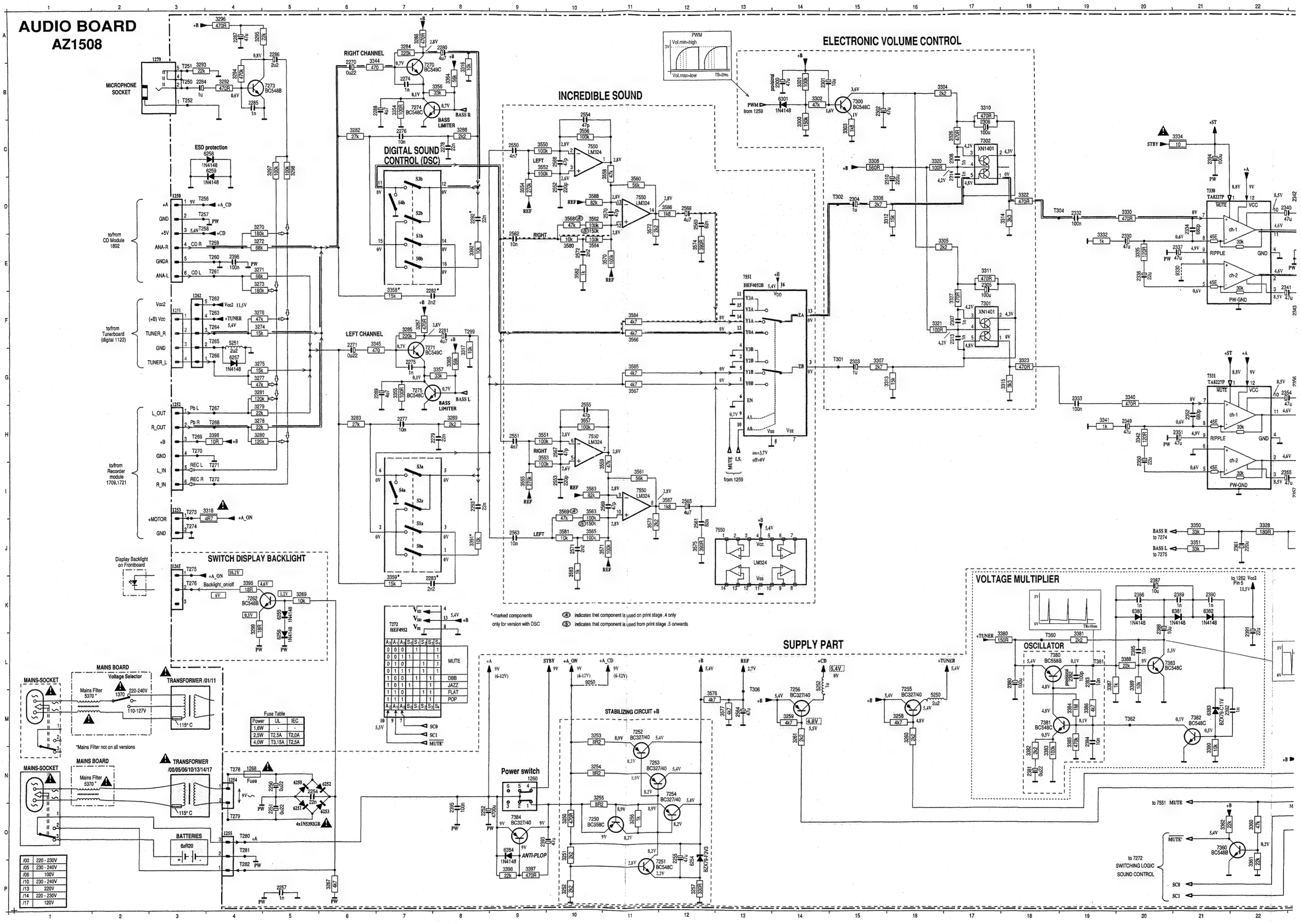
AUDIO BOARD
AZ1508
MICROPHONE SOCKET
ESD protection
RIGHT CHANNEL
LEFT CHANNEL
DIGITAL SOUND CONTROL (DSC)
INCREDIBLE SOUND
ELECTRONIC VOLUME CONTROL
SWITCH DISPLAY BACKLIGHT
Display Backlight on Frontboard
MAINS-SOCKET
MAINS BOARD
Voltage Selector
TRANSFORMER /01/11
TRANSFORMER /00/05/06/10/13/14/17
BATTERIES
*Mains Filter not on all versions
Fuse Table
Power switch
ANTI-PLOP
STABILIZING CIRCUIT +B
SUPPLY PART
VOLTAGE MULTIPLIER
OSCILLATOR
to 7272 SWITCHING LOGIC SOUND CONTROL
*-marked components only for version with DSC
indicates that component is used on print stage .4 only
indicates that component is used from print stage .5 onwards

8-2

ELECTRONIC VOLUME CONTROL

INCREDIBLE SOUND

SUPPLY PART

VOLTAGE MULTIPLIER

OSCILLATOR

STABILIZING CIRCUIT +B

PWM
Vol.min=high
Vol.max=low
TB=2ms

PWM from 1259

MUTE
I.S.
from 1259

REF

STBY
+A_ON
+A_CD
+TUNER
+CD
+ST
+A
+B
PW

to 7551 MUTE
to 7272 SWITCHING LOGIC SOUND CONTROL
to 1262 Vcc2 Pin 5
to/from Frontboard 1422 or 1424

BASS R to 7274
BASS L to 7275

HEADPHONE
SOCKET BOARD
Chinch socket
box right
box left
right
left

For sets with detachable loudspeaker boxes only

GND
TUNER_ON
CD_ON
MUTE
SC0
SC1
PWM
INCR_SOUND

SIGNAL PATH right channel
Incredible Sound off
Incredible Sound on

DC voltages measured with 9V battery supply.
...V Radio FM-mode
...V mains supply
...V CD mode

EVM

Audio board, Incr.Sound, 4W, 250498

(4) indicates that component is used on print stage .4 only
(5) indicates that component is used from print stage .5 onwards

1250	D 3	3318 I 4
1251	F 3	3320 C16
1252	H 3	3321 F16
1253	I 3	3322 D18
1254	N 4	3323 G18
1255	O 4	3326 C17
1258	G25	3327 F17
1259	M24	3328 J22
1260	N 9	3330 D20
1262	F 3	3332 E19
1265	J 3	3334 C21
1268	N 4	3335 E20
1270	B 2	3337 E24
1330	D25	3338 E24
2250	N 5	3340 G20
2251	O 5	3341 H19
2252	O 8	3342 H20
2254	N 5	3344 A 6
2255	O12	3345 F 8
2257	P 5	3346 E23
2270	A 6	3347 E23
2271	F 6	3350 J21
2274	B 7	3351 J21
2275	G 7	3354 B 7
2276	C 7	3355 G 7
2277	H 7	3356 B 8
2278	C 8	3357 G 8
2279	H 8	3358 E 7
2280	A 8	3359 K 7
2281	F 8	3360 O22
2282	F 7	3361 P22
2283	K 7	3362 O21
2284	B 3	3364 B 8
2285	B 4	3365 G 8
2286	A 5	3380 L18
2287	A 4	3381 L19
2288	B 7	3382 N18
2289	G 7	3383 N18
2292	D 8	3384 M19
2293	I 8	3385 M19
2300	B14	3386 M19
2301	B14	3387 L19
2302	B15	3388 L20
2303	G15	3389 L20
2304	D15	3390 N21
2305	E17	3391 J 8
2306	C17	3392 E 8
2307	F17	3395 K 4
2308	C17	3396 H 4
2310	D16	3397 P 9
2313	F17	3398 P 9
2314	C17	3550 C 9
2330	E20	3551 H 9
2332	D19	3552 C 9
2333	G19	3553 H 9
2334	D21	3554 D 9
2336	E20	3555 I 9
2337	E21	3556 C10
2340	D22	3557 H10
2341	E22	3558 C11
2342	D23	3559 I10
2343	F23	3560 D11
2349	H20	3561 I11
2350	H20	3562 D10
2351	H21	3563 I10
2352	H21	3564 E10
2354	G22	3565 J10
2355	I22	3566 F11
2356	G23	3567 G11
2357	I23	3568 D10
2361	J22	3569 I10
2362	E23	3570 E11
2363	E23	3571 J10
2380	L18	3572 D11
2381	N16	3573 J11
2382	L19	3574 E12
2383	L19	3575 J12
2384	M19	3576 M12
2385	L20	3577 M13
2386	K20	3580 E10
2387	K20	3581 J10
2388	K20	3582 E10
2389	K21	3583 J10
2390	K21	3584 F11
2391	K22	3585 G11
2392	M21	3586 D12
2393	O 9	3587 I12
2394	C21	3588 D10
2395	O 8	3589 I10
2396	E 4	5250 M16
2550	C 9	5251 F 4
2551	H 9	5252 L14
2552	D10	6250 N 6
2553	I10	6251 O 5
2554	B10	6252 N 6
2555	H10	6253 O 6
2560	D12	6254 P12
2561	J12	6255 K 5
2562	E 9	6256 L 5
2563	J 9	6257 G 4
2564	M13	6258 C 4
2565	I12	6259 C 4
2566	D12	6301 B14
2567	H10	6350 J23
2568	C10	6351 J23
2569	I11	6380 K20
2570	D11	6381 K21
2571	J10	6382 K21
2572	E10	6383 M21
3250	O10	6384 O 9
3251	O10	7250 O10
3252	P10	7251 P11
3253	M10	7252 M11
3254	N10	7253 N11
3255	N10	7254 N12
3256	O11	7255 M16
3257	P12	7256 M14
3258	M16	7262 K 4
3259	M14	7270 A 7
3260	M16	7271 G 7
3261	M14	7272 K 7
3267	P 8	7273 B 5
3269	K 5	7274 B 7
3270	D 4	7275 G 7
3271	E 4	7300 B15
3272	E 4	7301 F17
3273	E 4	7302 C17
3274	F 4	7330 D21
3275	G 4	7331 G21
3276	F 4	7360 O21
3277	G 4	7380 L18
3278	H 4	7381 M18
3279	H 4	7382 M21
3280	H 4	7383 L20
3281	G 4	7384 O 9
3282	C 6	7550 C10
3283	H 6	7550 H10
3284	A 7	7550 I11
3285	F 7	7550 D11
3286	A 7	7551 E13
3287	F 7	9250 L10
3288	C 8	9252 M23
3289	H 8	9330 E21
3292	B 4	9331 F24
3293	A 3	9332 D24
3294	B 4	
3295	A 4	
3296	A 4	
3297	C 5	
3298	C 5	
3299	K 4	
3300	C14	
3301	B14	
3302	B14	
3303	C15	
3304	B16	
3305	E16	
3306	D15	
3307	G15	
3308	C15	
3310	B17	
3311	E17	
3312	D15	
3313	G15	
3314	D18	
3315	G18	
3316	A 8	
3317	G 8	

8-3

AUDIO BOARD
AZ1407

MICROPHONE SOCKET

ESD protection

RIGHT CHANNEL

LEFT CHANNEL

DIGITAL SOUND CONTROL (DSC)

BASS LIMITER

ELECTRONIC VOLUME CONTROL

PWM from 1263

to/from CD Module 1802

to/from Tunerboard analog 8110 digital 1122

to/from Recorder module 1709,1721

SWITCH DISPLAY BACKLIGHT (not for AZ1407)

Display Backlight on Frontboard

*-marked components only for version with DSC

SUPPLY PART

STABILIZING CIRCUIT +B

Power switch

ANTI-PLOP

VOLTAGE MULTIPLIER (for sets with digital tuner only)

OSCILLATOR

MAINS BOARD

MAINS-SOCKET

Mains Filter 5370*

Voltage Selector

TRANSFORMER /01/11

TRANSFORMER /00/05/08/10/13/14/17

BATTERIES 6xR20

*Mains Filter not on all versions

Fuse Table			
Power	UL	IEC	9254
1.6W	-	-	x
2.5W	T2.5A	T2.0A	-
4.0W	T3.15A	T2.5A	-

/00	220 - 230V
/05	230 - 240V
/06	100V
/10	230 - 240V
/13	220V
/14	220 - 230V
/17	120V

8-3

ELECTRONIC VOLUME CONTROL

PWM
Vol.min=high
3V
Vol.max=low
TB=2ms

PWM from 1263

SUPPLY PART

VOLTAGE MULTIPLIER
(for sets with digital tuner only)

OSCILLATOR

STABILIZING CIRCUIT +B

Power switch 1260

IGITAL SOUND ONTROL (DSC)

BASS LIMITER

STBY
MUTE
TUNER_ON
CD_ON
SC0
SC1
PWM

to/from Frontboard 1422 or 1424

to 7272 SWITCHING LOGIC SOUND CONTROL

to 6301 PWM

HEADPHONE 1330

2344, 2345 1000µF for AZ1307, AZ1407 1.5W output power

For sets with detachable loudspeaker boxes only

SOCKET BOARD

Cinch socket

box right
box left

right
left

*-marked components only for version with DSC

SIGNAL PATH right channel
Incredible Sound off
Incredible Sound on

DC voltages measured with 9V battery supply.
....V Radio FM-mode
....V mains supply
....V CD mode

EVM

Audio board, 1.6+2.5W, 070596

	1250 D 3	3358 E 7
	1251 F 3	3359 K 7
	1252 H 3	3360 O22
	1253 I 3	3361 P22
	1254 N 4	3362 O21
A	1255 O 4	3364 B 8
	1258 G25	3365 G 8
	1260 N 9	3380 L18
	1262 F 3	3381 L19
	1263 M24	3382 N18
	1264 M24	3383 N18
	1265 J 3	3384 M19
	1268 N 4	3385 M19
	1270 B 2	3386 M19
	1330 D25	3387 L19
	2250 N 5	3388 L20
B	2251 O 5	3389 L20
	2252 O 8	3390 N21
	2254 N 5	3391 J 8
	2255 O12	3392 E 8
	2257 P 5	3393 F23
	2270 A 6	3394 D23
	2271 F 6	3395 K 4
	2274 B 7	3396 H 4
	2275 G 7	3397 P 9
	2276 C 7	3398 P 9
C	2277 H 7	3566 D11
	2278 C 8	3567 G11
	2279 H 8	5250 M16
	2280 A 8	5251 F 4
	2281 F 8	5252 L14
	2282 F 7	6250 N 5
	2283 K 7	6251 O 5
	2284 B 3	6252 N 6
	2285 B 4	6253 O 6
	2286 A 5	6254 P12
	2287 A 4	6255 K 5
D	2288 B 7	6256 L 5
	2289 G 7	6257 G 4
	2292 D 8	6258 C 4
	2293 I 8	6259 C 4
	2300 B14	6301 B14
	2301 B14	6350 G5
	2302 B15	6351 G5
	2303 G15	6380 K20
	2304 D15	6381 K21
	2305 E17	6382 K21
	2306 C17	6383 M21
E	2307 F17	6384 O 9
	2308 C17	7250 O10
	2310 D16	7251 P11
	2313 F17	7252 M11
	2314 C17	7253 N11
	2330 E20	7254 N12
	2331 E20	7255 M16
	2332 D19	7256 M14
	2333 E19	7262 K 4
	2334 D21	7270 A 7
F	2335 E21	7271 G 7
	2337 E21	7272 K 7
	2340 D22	7273 B 5
	2341 E22	7274 B 7
	2342 D23	7275 G 7
	2343 F23	7300 B15
	2344 D23	7301 F17
	2345 E23	7302 C17
	2361 G22	7330 D21
	2362 E23	7360 O21
	2363 E23	7380 L18
G	2380 L18	7381 M18
	2381 N18	7382 M21
	2382 L19	7383 L20
	2383 L19	7384 O 9
	2384 M19	9250 L10
	2385 L20	9252 M23
	2386 K20	9254 N 4
	2387 K20	9270 F14
	2388 K20	9271 G14
	2389 K21	9334 G25
	2390 K21	9335 G25
	2391 K22	9390 C21
	2392 M21	
H	2393 O 9	
	2394 C21	
	2395 O 8	
	2396 E 4	
	3250 O10	
	3251 O10	
	3252 P10	
	3253 M10	
	3254 N10	
	3255 N10	
	3256 O11	
	3257 P12	
I	3258 M16	
	3259 M14	
	3260 M16	
	3261 M14	
	3267 P 8	
	3269 K 5	
	3270 D 4	
	3271 E 4	
	3272 E 4	
	3273 E 4	
	3274 F 4	
	3275 G 4	
	3276 F 4	
	3277 G 4	
	3278 H 4	
	3279 H 4	
	3280 H 4	
K	3281 G 4	
	3282 C 6	
	3283 H 6	
	3284 A 7	
	3285 F 7	
	3286 A 7	
	3287 F 7	
	3288 C 8	
	3289 H 8	
	3292 B 4	
	3293 A 3	
	3294 B 4	
	3295 A 4	
	3296 A 4	
	3297 C 5	
	3298 C 5	
	3299 K 4	
	3300 C14	
	3301 B14	
	3302 B14	
	3303 C15	
	3304 B16	
	3305 E16	
M	3306 D15	
	3307 G15	
	3308 C15	
	3310 B17	
	3311 E17	
	3312 D15	
	3313 G15	
	3314 D18	
	3315 G18	
	3316 A 8	
N	3317 G 8	
	3318 I 4	
	3320 C16	
	3321 F16	
	3322 D18	
	3323 G18	
	3326 C17	
	3327 F17	
	3328 G22	
	3330 D20	
O	3331 E20	
	3332 E19	
	3333 E19	
	3334 C21	
	3337 E24	
	3338 E24	
	3344 A 6	
	3345 F 6	
	3346 E23	
	3347 E23	
	3350 G21	
P	3351 G21	
	3354 B 7	
	3355 G 7	
	3356 B 8	
	3357 G 8	

RECORDER MODULE *MTF-PA-SD-S*

EXPLODED VIEW MODULE

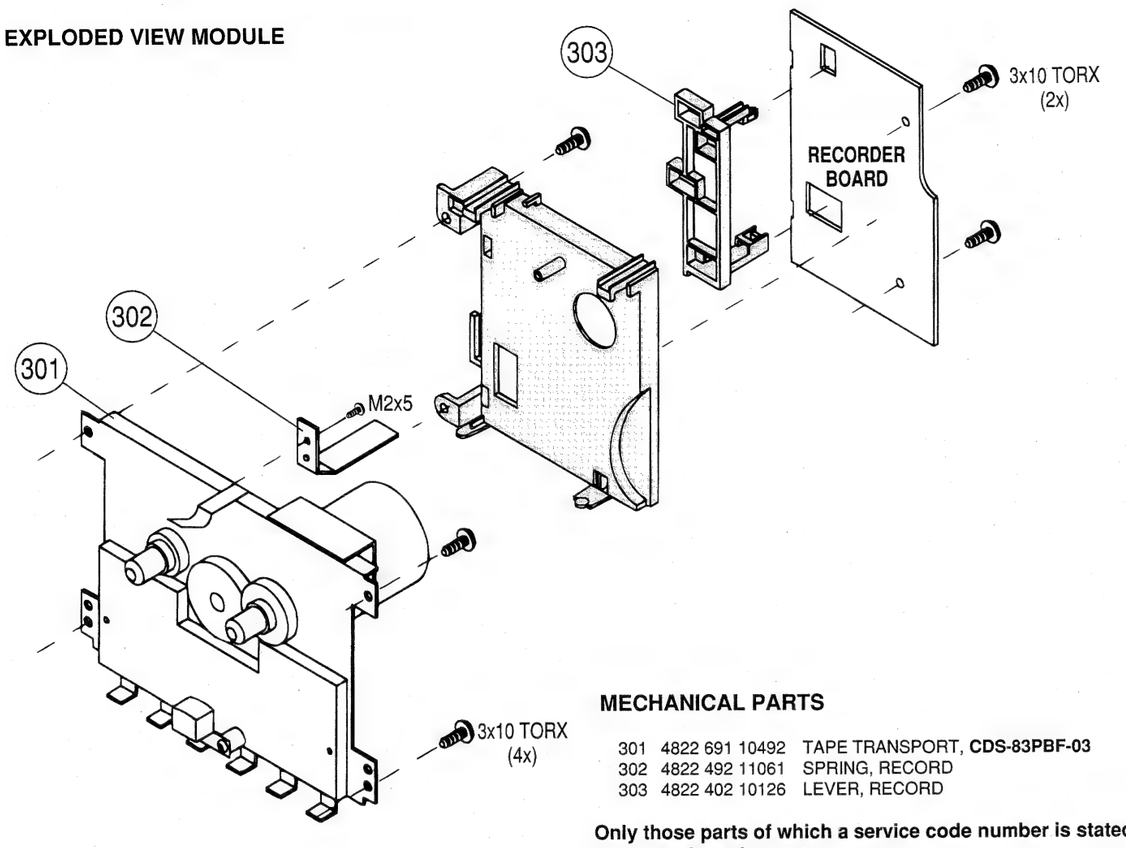

MECHANICAL PARTS

301	4822 691 10492	TAPE TRANSPORT, **CDS-83PBF-03**
302	4822 492 11061	SPRING, RECORD
303	4822 402 10126	LEVER, RECORD

Only those parts of which a service code number is stated are normal service parts.

ADJUSTMENT of AZIMUTH

Insert cassette directly into cassette compartment→ door remains open.
Use test cassette SBC420 (4822 397 30071) 10kHz part.
Adjust left hand screw for max. output and left channel = right channel.

EXPLODED VIEW TAPE TRANSPORT

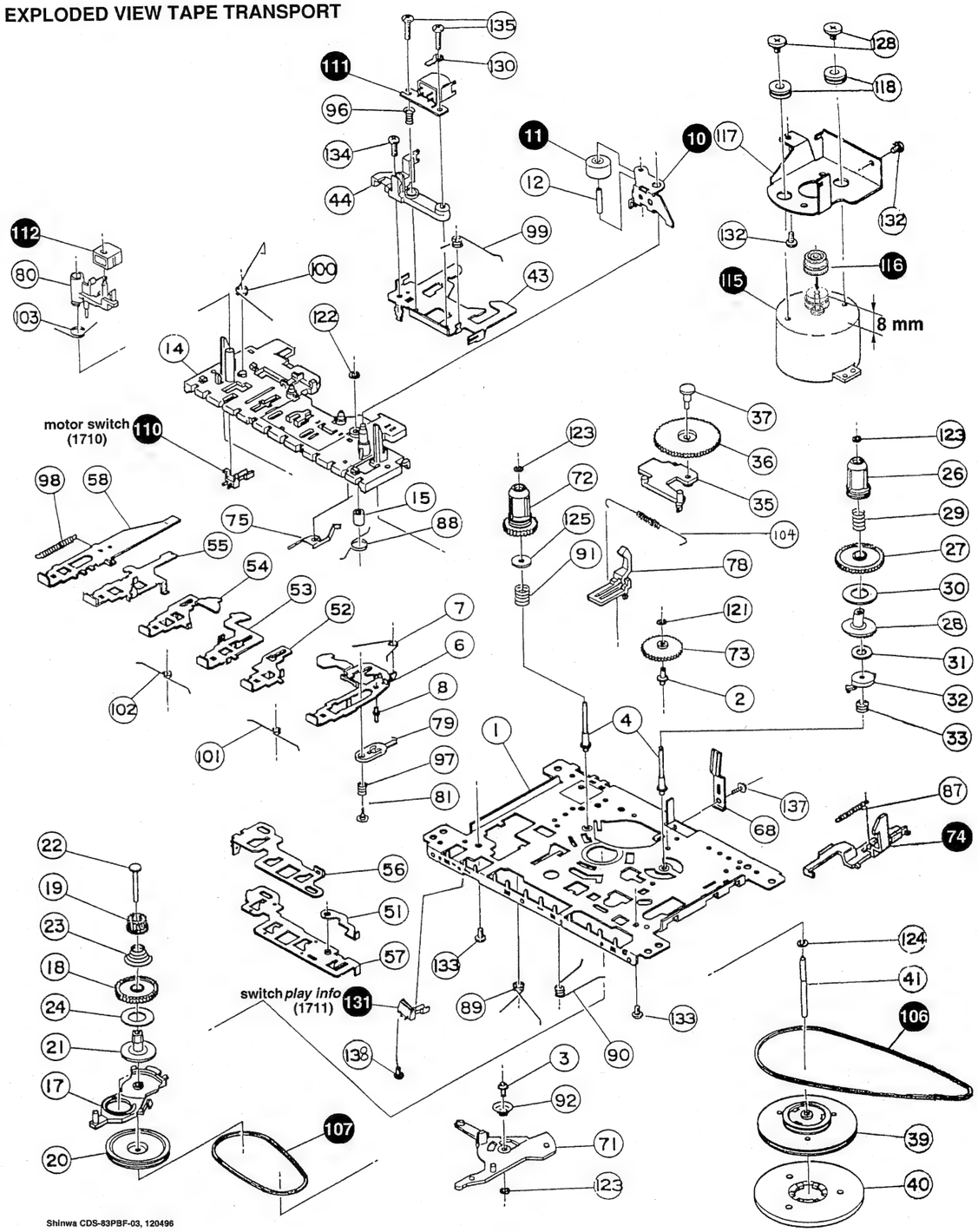

Only those parts of which a service code number is stated are normal service parts.

10	4822 528 70849	PINCH ROLLER ARM
11	4822 528 70695	PINCH ROLLER ASSY
74	4822 403 30792	EJECT HOOK
106	4822 358 31325	MAIN BELT
107	4822 358 31124	SUB BELT
110	4822 278 90663	LEAF SWITCH, MOTOR ON/OFF
111	4822 249 10397	REC/PB-HEAD, MS15R-AA2N1
112	4822 249 40306	ERASE HEAD, TDK6PA
115	4822 361 21656	MOTOR, EG-530AD-9B
116	4822 528 81497	MOTOR PULLEY
131	4822 276 13712	LEAF SWITCH, INDICATION *PLAY*

9-2

1701 C15 1702 G15 1703 E 2 1705 G10 1706 D15 1707a B 7 1707b F 7
1707c B 3 1707d F 3 1707e E12 1707f E10 1708 H14 1709 A15 1710 E15
1711 H15 1718 F15 1719 C14 1720 D14 1721 G14 2700 D12 2701 D11
2703 G 7 2704 C 6 2706 B 4 2707 B 6 2708 C 3 2709 G 3 2710 G12
2711 H 5 2712 E 7 2713 C 4 2714 C 3 2715 C 6 2716 C 6 2717 D 7
2718 D 8 2719 C 8 2720 G 4 2721 G 3 2722 G 7 2723 F 7 2724 G 7
2725 G 9 2726 G 9 2727 F 7 2728 B 9 2729 C13 2730 G11 2731 G12
2732 G12 2733 H13 2734 G10 2735 G10 2736 D 4 2737 H 4 2738 A 1
2739 A 2 2740 F13 3700 G 8 3701 D 7 3702 B 6 3703 D 3 3704 C 3
3705 C 3 3706 D 4 3707 D 5 3708 D 8 3709 C 8 3710 D 9 3711 E 5
3712 E 7 3713 G 3 3714 F 3 3715 G 3 3716 H 4 3717 H 8 3718 G 8
3719 H 9 3720 F 7 3721 F 5 3722 A 2 3723 A 2 3724 C10 3726 B 9
3727 E 9 3728 C10 3730 F12 3731 G12 3732 H13 3733 H 5 3734 G13
3735 F10 3736 C13 3737 D13 3738 D12 3739 C11 3740 D11 3743 C 9
3744 G 9 3745 D 6 3746 G 7 3747 G12 3748 B 3 3749 B 2 3750 E13
5701 F11 6704 G 6 7701 C11 7702 G13 7703 C 9 7704 B10 7705a C 4
7705b G 4 7706 D 6 7707 G 7

RECORDER BOARD

REC/PB-Amplifier RIGHT

REC/PB-Amplifier LEFT

TAPE TRANSPORT

BIAS OSCILLATOR

Rec/Pb Equalization

MUTE

ALC delay

ALL CARBON RESISTORS E12 SERIES
0.33W `5% UNLESS OTHERWISE STATED.

PLATE CERAMIC CAPACITOR f = 25V
MYLAR CAPACITOR G = 50V
ELECTROLYTIC CAPACITOR

ALL TUBULAR CERAMIC CAPACITORS UNLESS OTHERWISE STATED.

Pb Rec Rec/Pb-Switch 1707 1 2 3 4 5 6 7 8 9 10 11 12 13 14 15 16 17 18

Adjustment of tape speed: *(use Universal Test Cassette SBC420)*
Measure on headphone socket and adjust trimpot. on motor to 3150Hz ±1%.

DC voltages measured with 9V battery supply
.... V Play mode
...V Record mode

SIGNAL PATH
Pb right Rec right
Pb left Rec left

JEWEL single tape, 240496

96-01-17

9-3

RECORDER BOARD / copper side view

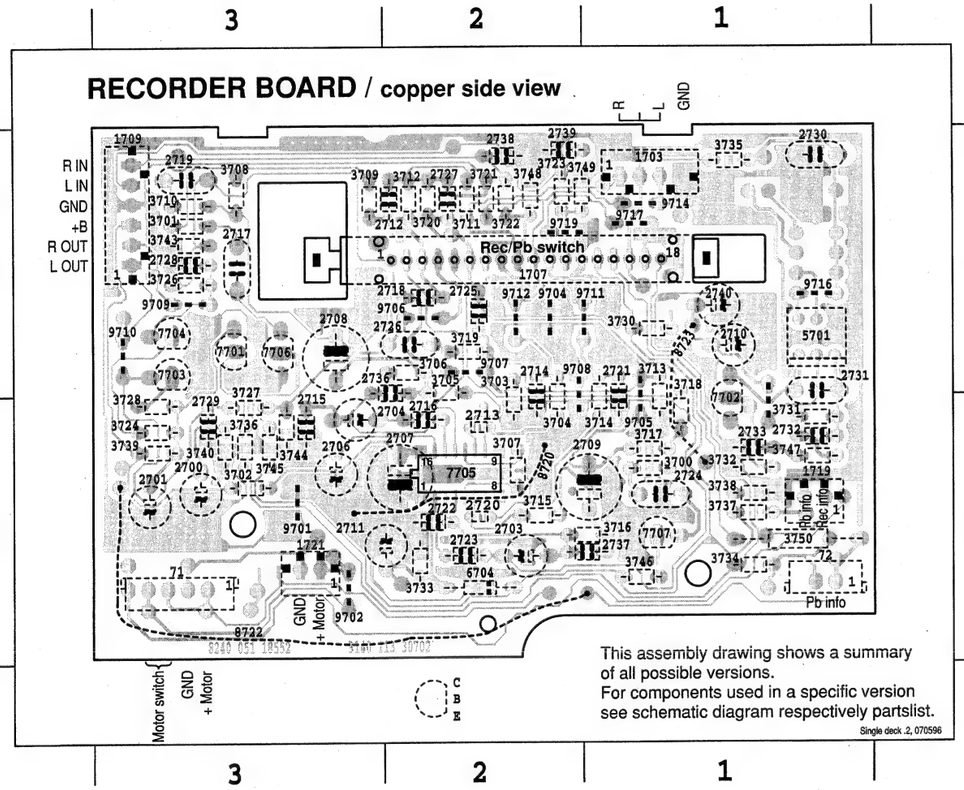

This assembly drawing shows a summary of all possible versions.
For components used in a specific version see schematic diagram respectively partslist.

Single deck .2, 070596

71	B 3	2737	B 1	3738	B 1		
72	B 1	2738	A 2	3739	B 3		
1703	A 1	2739	A 2	3740	B 3		
1707	A 2	2740	A 1	3743	A 3		
1709	A 3	3700	B 1	3744	B 3		
1719	B 1	3701	A 3	3745	B 3		
1721	B 3	3702	B 3	3746	B 1		
2700	B 3	3703	B 2	3747	B 1		
2701	B 3	3704	B 2	3748	A 2		
2703	B 2	3705	A 2	3749	A 2		
2704	B 3	3706	A 2	3750	B 1		
2706	B 3	3707	B 2	5701	A 1		
2707	B 2	3708	A 3	6704	B 2		
2708	A 3	3709	A 3	7701	A 3		
2709	B 1	3710	A 3	7702	B 1		
2710	A 1	3711	A 2	7703	A 3		
2711	B 2	3712	A 2	7704	A 3		
2712	A 2	3713	B 1	7705	B 2		
2713	B 2	3714	B 1	7706	A 3		
2714	B 2	3715	B 2	7707	B 1		
2715	B 3	3716	B 1	9701	B 3		
2716	B 2	3717	B 1	9702	B 3		
2717	A 3	3718	B 1	9704	A 2		
2718	A 2	3719	A 2	9705	B 1		
2719	A 3	3720	A 2	9706	A 2		
2720	B 2	3721	A 2	9707	A 2		
2721	B 1	3722	A 2	9708	B 2		
2722	B 2	3723	A 2	9709	A 3		
2723	B 2	3724	B 3	9710	A 3		
2724	B 1	3726	A 3	9711	A 1		
2725	A 2	3727	B 3	9712	A 2		
2726	A 2	3728	B 3	9713	B 1		
2727	A 2	3730	A 1	9714	A 1		
2728	A 3	3731	B 1	9716	A 1		
2729	B 3	3732	B 1	9717	A 1		
2730	A 1	3733	B 2	9719	A 2		
2731	A 1	3734	B 1	8720	B 2		
2732	B 1	3735	A 1	8722	B 3		
2733	B 1	3736	B 3	8723	A 1		
2736	A 2	3737	B 1				

RECORDER BOARD / component side view

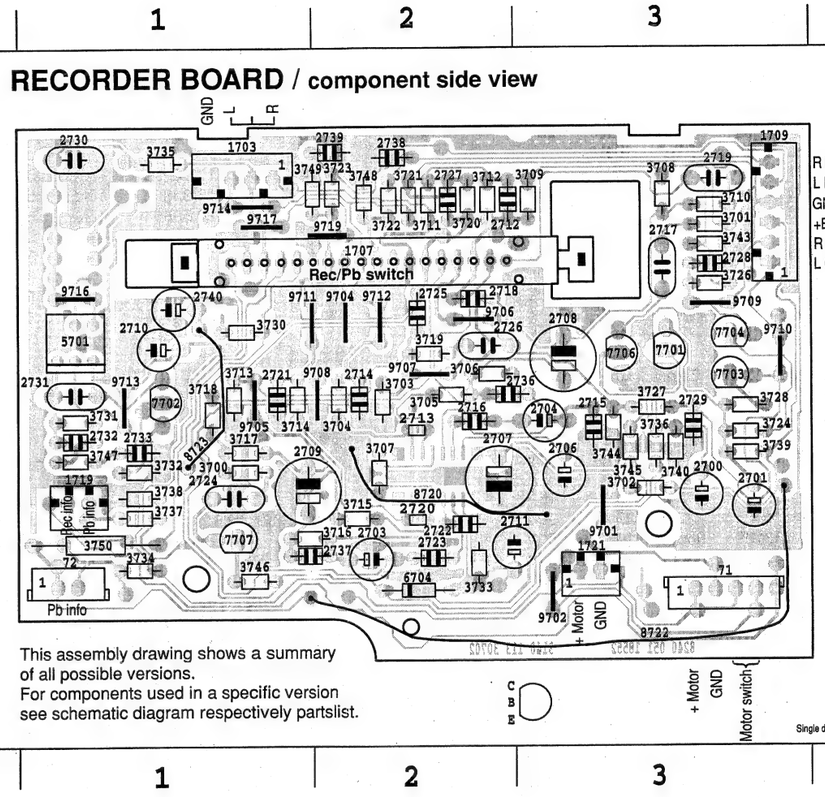

This assembly drawing shows a summary of all possible versions.
For components used in a specific version see schematic diagram respectively partslist.

Single deck .2, 070596

ELECTRICAL PARTSLIST RECORDER BOARD

MISCELLANEOUS

1707	4822 277 11504	SWITCH SLIDE, REC/PB

CAPACITORS

2700	4822 124 40242	1µF	20%	63V
2701	4822 124 40242	1µF	20%	63V
2703	4822 124 41596	22µF	20%	50V
2704	4822 124 41596	22µF	20%	50V
2706	4822 124 41397	47µF	20%	25V
2707	4822 124 80144	220µF	20%	25V
2708	4822 124 41584	100µF	20%	10V
2709	4822 124 41584	100µF	20%	10V
2710	4822 124 40246	4,7µF	20%	63V
2711	4822 124 41596	22µF	20%	50V
2712	4822 126 12339	2,2nF	10%	16V
2713	5322 122 32311	470pF	10%	100V
2714	4822 126 12339	2,2nF	10%	16V
2715	4822 126 11585	22nF	20%	50V
2716	4822 126 11585	22nF	20%	50V
2717	4822 121 51303	4,7nF	10%	50V
2718	4822 122 10466	220pF	10%	
2719	4822 121 51305	15nF	10%	50V
2720	5322 122 32311	470pF	10%	100V
2721	4822 126 12339	2,2nF	10%	16V
2722	4822 126 11585	22nF	20%	50V
2723	4822 126 11585	22nF	20%	50V
2724	4822 121 51303	4,7nF	10%	50V
2725	4822 122 10466	220pF	10%	
2726	4822 121 51305	15nF	10%	50V
2727	4822 126 12339	2,2nF	10%	16V
2728	4822 126 11714	4,7nF	20%	
2729	4822 126 11714	4,7nF	20%	
2730	5322 122 32052	680pF	10%	100V
2731	4822 121 51304	10nF	10%	50V
2732	4822 122 10577	3,3nF	10%	16V
2733	4822 126 11585	22nF	20%	50V
2736	4822 122 33169	680pF	10%	50V
2737	4822 122 33169	680pF	10%	50V
2738	4822 122 33519	470pF	10%	50V
2739	4822 122 33519	470pF	10%	50V
2740	4822 124 41584	100µF	20%	10V

RESISTORS

3700	4822 116 52224	470Ω	5%	0,5W
3701	4822 116 52224	470Ω	5%	0,5W
3702	4822 116 52175	100Ω	5%	0,5W
3703	4822 116 52195	47Ω	5%	0,5W
3704	4822 116 52224	470Ω	5%	0,5W
3705	4822 116 83872	220Ω	5%	0,5W
3706	4822 116 52245	150kΩ	5%	0,16W
3707	4822 116 52245	150kΩ	5%	0,16W
3708	4822 116 52296	6,8kΩ	5%	0,5W
3709	4822 116 52296	6,8kΩ	5%	0,5W
3710	4822 116 83864	10kΩ	5%	0,5W
3711	4822 116 52207	1,2kΩ	5%	0,5W
3712	4822 116 52303	8,2kΩ	5%	0,5W
3713	4822 116 52195	47Ω	5%	0,5W
3714	4822 116 52224	470Ω	5%	0,5W
3715	4822 116 83872	220Ω	5%	0,5W
3716	4822 116 52245	150kΩ	5%	0,16W
3717	4822 116 52296	6,8kΩ	5%	0,5W
3718	4822 116 52296	6,8kΩ	5%	0,5W
3719	4822 116 83864	10kΩ	5%	0,5W
3720	4822 116 52303	8,2kΩ	5%	0,5W
3721	4822 116 52207	1,2kΩ	5%	0,5W
3722	4822 116 52257	22kΩ	5%	0,5W
3723	4822 116 52257	22kΩ	5%	0,5W
3724	4822 116 83864	10kΩ	5%	0,5W
3726	4822 116 83863	1KΩ	5%	0,5W
3727	4822 116 83863	1KΩ	5%	0,5W
3728	4822 116 83864	10kΩ	5%	0,5W
3730	4822 116 52186	22Ω	5%	0,5W
3731	4822 116 52304	82kΩ	5%	0,5W
3732	4822 116 52176	10Ω	5%	0,5W
3733	4822 111 30893	4,7MΩ	5%	0,2W
3734	4822 116 83864	10kΩ	5%	0,5W
3735	4822 116 83863	1KΩ	5%	0,5W
3736	4822 116 52234	100kΩ	5%	0,5W
3737	4822 116 83864	10kΩ	5%	0,5W
3738	4822 116 52234	100kΩ	5%	0,5W
3739	4822 116 83864	10kΩ	5%	0,5W
3740	4822 116 52234	100kΩ	5%	0,5W
3743	4822 116 52269	3,3kΩ	5%	0,5W
3744	4822 116 52269	3,3kΩ	5%	0,5W
3745	4822 116 83864	10kΩ	5%	0,5W
3746	4822 116 83864	10kΩ	5%	0,5W
3747	4822 116 52191	33Ω	5%	0,5W
3748	4822 116 52283	4,7kΩ	5%	0,5W
3749	4822 116 52283	4,7kΩ	5%	0,5W
3750	4822 116 52176	10Ω	5%	0,5W

COILS

5701	4822 157 10371	OSC. COIL VAR. 100kHz

DIODES

6704	4822 130 30621	1N4148

TRANSISTORS

7701	4822 130 40938	BC548
7702	4822 130 40981	BC337-25
7703	4822 130 40981	BC337-25
7704	4822 130 40981	BC337-25
7706	4822 130 44196	BC548C
7707	4822 130 44196	BC548C

INTEGRATED CIRCUITS

7705©	4822 209 32918	AN7318S, Rec/Pb-AMPLIFIER IC

9-4

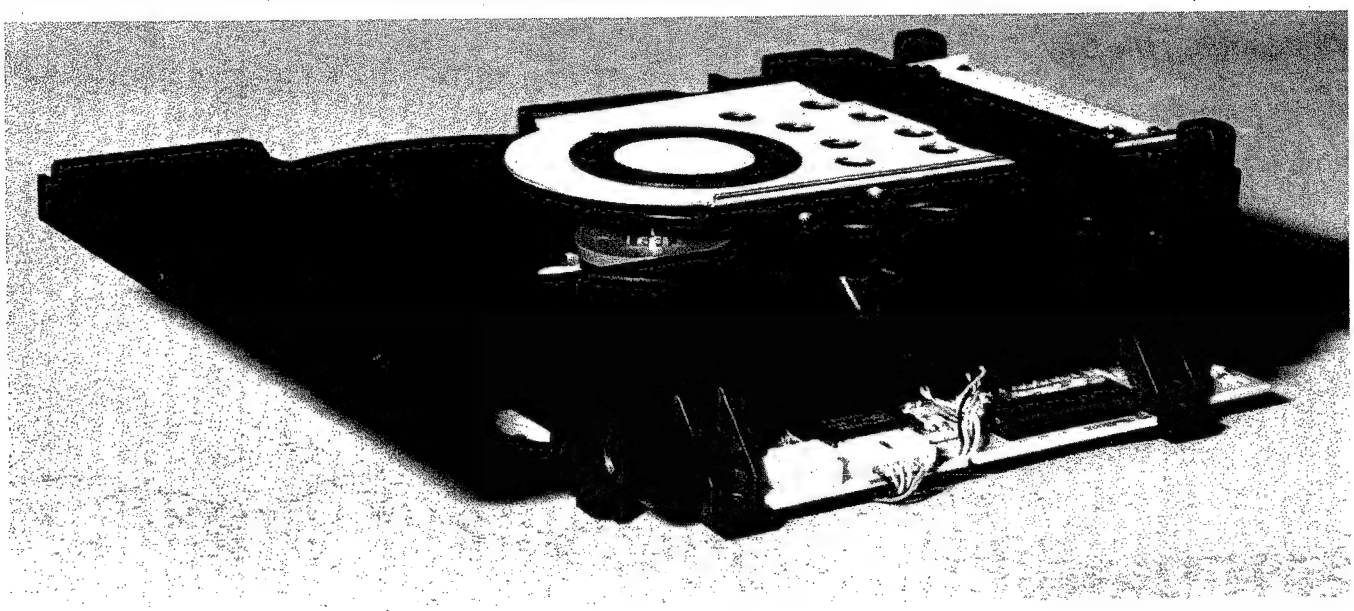

ECO SHORT LOADER UNIT

for Portables

TABLE OF CONTENTS

Dismantling hints 10-2
Disassembly drawings 10-2
Functional Diagram 10-5
Abbreviations 10-5

CD Board
Component Layout 10-6
Schematic Diagram 10-7

Faultfinding Tree CD 10-8
Exploded view 10-9
Partslist 10-10

Dismantling hints CD Short Loader

Dismantling the tray

a) Press open/close button to open the tray. If the tray doesn´t work, use a small screwdriver as shown in Fig.1 point 1 to move the tray outside. After the first centimetre it is possible to pull the tray out by hand.

b) Release two snaps and remove tray.

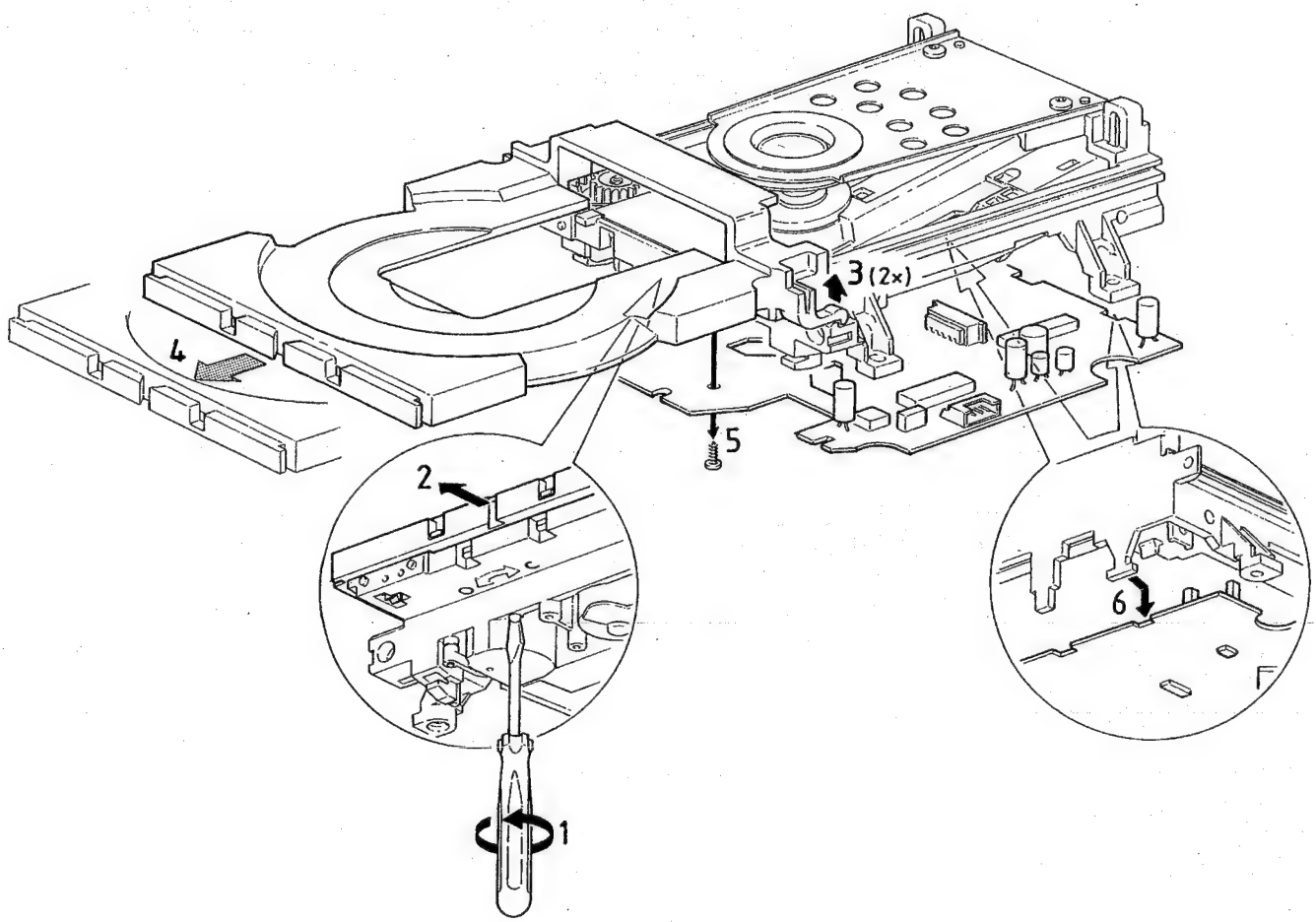

Fig. 1

Assembly of gear

a) Use a pin (e.g. a paperclip) to align the cam wheel (a) withthe gear wheel (b). See Fig. 2.

b) Fix the wheels with the small plastic whashers.

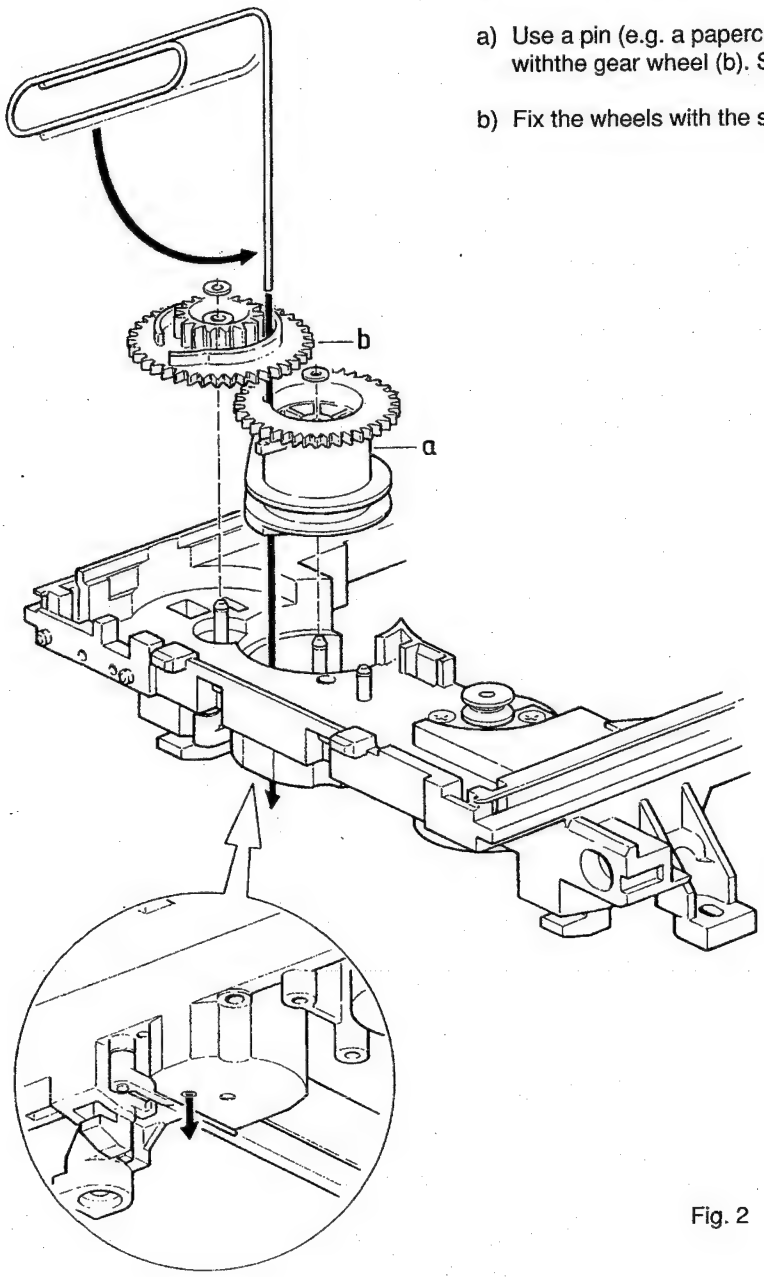

Fig. 2

c) Mount idle wheel 2 (c) and idle wheel 1 (d) in any position. See Fig. 3.

d) Fix the idle wheel 1 (d) with the small plastic whasher.

e) Mount the driving belt.

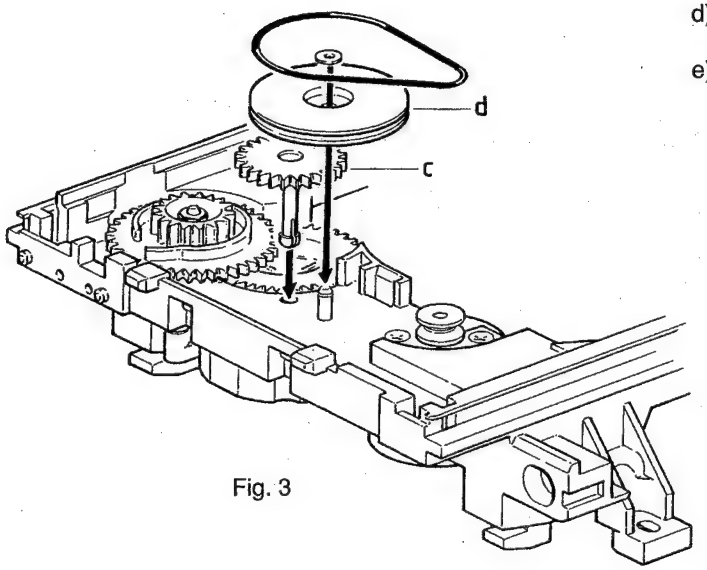

Fig. 3

f) Mount the pinion guiding assy and the cover as shown in Fig. 4.

g) Turn the gear wheel (b) counter clockwise to endposition.

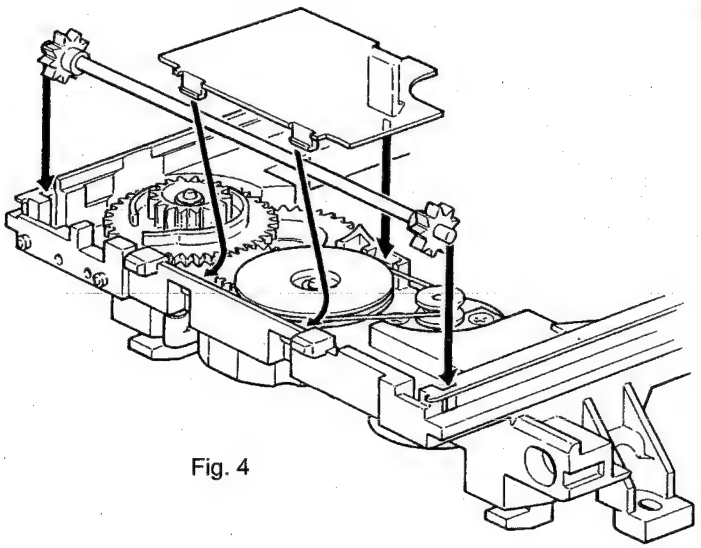

Fig. 4

h) Mount the CD Mechanism as shown in Fig. 5.

i) Mount the tray (Align the tray to the chassis and push it inside).

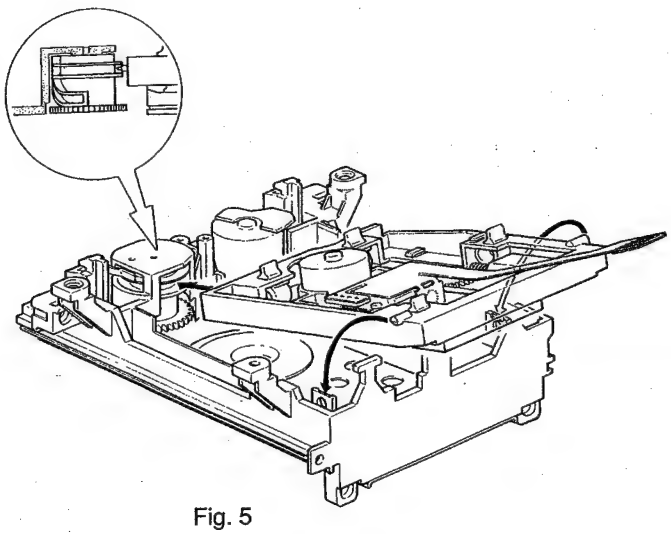

Fig. 5

Check if tray mechanism works correctly!

1) Turn the gear wheel (b) clockwise to its endposition (Use a small screwdriver as shown in Fig. 1 point 1).

   The tray has to move to inner position first and then the CD mechanism has to move to its upper position.

2) Turn the gear wheel (b) counter clockwise to its endposition.

   The CD Mechanism has to move to its lower position first and then the tray has to move outside.

10-5

BLOCKDIAGRAM CD Module

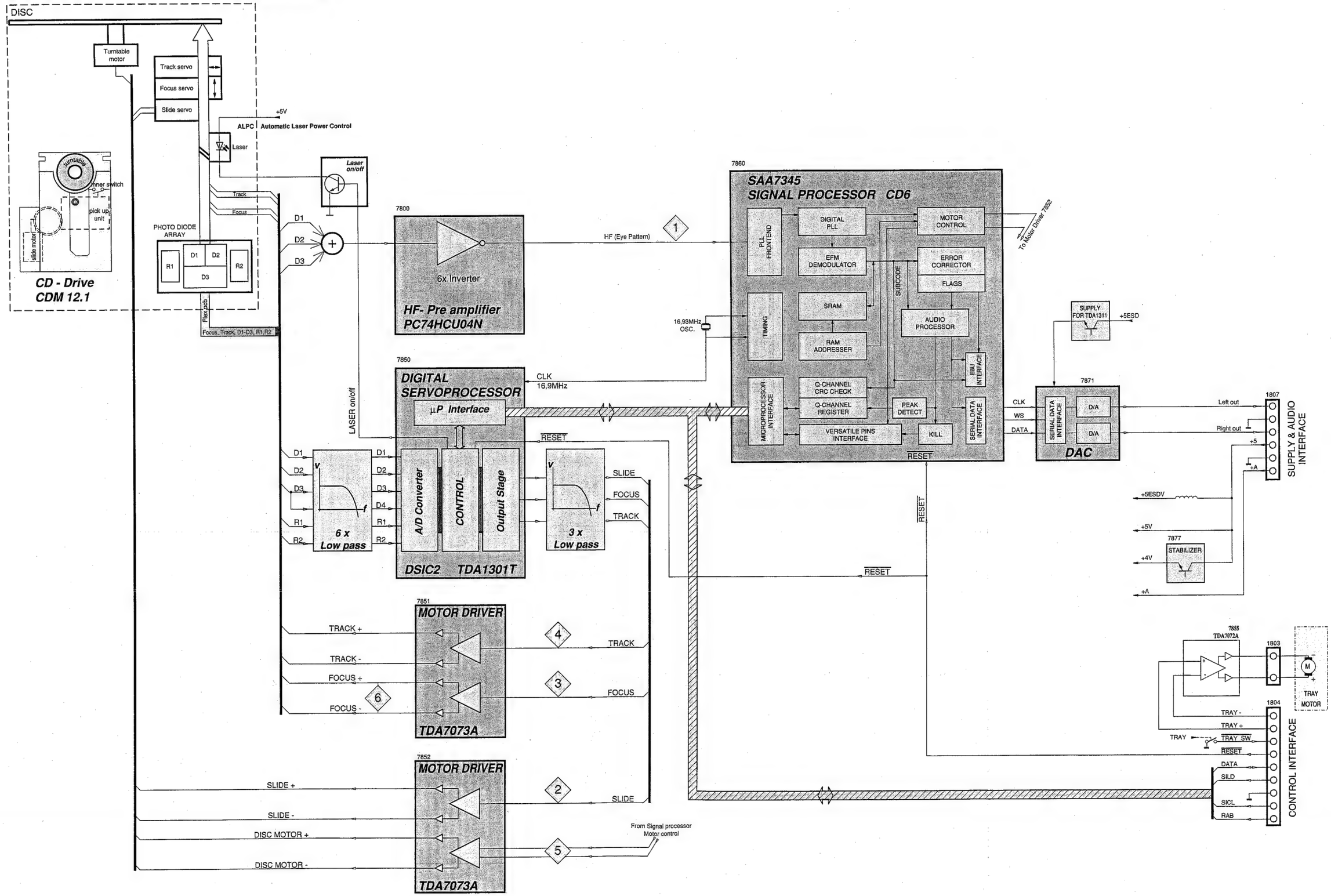

Abbreviations CD Part

DSIC2

Pin	*Name*	*Direction*	*Description*
1	RESET	µP → DSIC2	Reset input (Low level is active)
2	Laser on/off	DSIC2 → Laser switch	Switches Laser on/off (High level is active)
3	Gnd	Gnd	Ground (Analogue part)
4	VRH	not connected	Reference input for A/D Converter
5	D1	Diode array → DSIC2	Unipolar current input (Central diode signal input)
6	D2	Diode array → DSIC2	Unipolar current input (Central diode signal input)
7	D3	Diode array → DSIC2	Unipolar current input (Central diode signal input)
8	Vref	Gnd	Reference input for A/D Converter
9	D4	Diode array → DSIC2	Unipolar current input (Central diode signal input)
10	R1	Diode array → DSIC2	Unipolar current input (Satellite diode signal input)
11	R2	Diode array → DSIC2	Unipolar current input (Satellite diode signal input)
12	VDD		Supply for DSIC2 (Analogue part)
13			
14	TS1	Gnd	Test input 1
15	TS2	Gnd	Test input 2
16	OTD	not connected	Off Track Detection (Low level is active)
17	CLO	not connected	Clock output
18	XTLO		Oscillator output pin
19	XTLI		Oscillator input pin
20	VDD		+Supply for DSIC2 (Digital part)
21	Gnd		Ground (Digital part)
22	Track	DSIC2 → Servo Driver	Radial actuator output
23	Focus	DSIC2 → Servo Driver	Focus actuator output
24	Slide	DSIC2 → Servo Driver	Slide motor output
25	SILD	µP → DSIC2	Serial Interface Load
26	SICL	µP → DSIC2	Serial Interface Clock
27	SIDA	µP ↔ DSIC2	Serial Interface Data
28	VDD		+Supply for DSIC2 (Digital part)

SIGNAL PROCESSOR CD6

Pin	*Name*	*Direction*	*Description*
1	CL11	not connected	11,2896MHz clock output (3-state)
2	DOBM	not connected	digital bi-phase mark output (3-state)
3	V1	→ Signal processor	Versatile input (used for Version detection)
4	V2	→ Signal processor	Versatile input (used for inner switch detection)
5	Test2	Gnd	Test input of Signal processor
6	Test1	Gnd	Test input of Signal processor
7	ISLICE	Signal processor → Signal processor	Current feedback from internal data slicer
8	HFIN	HF Pre-amp → Signal processor	Comparator signal input
9	HFREF	HF Pre-amp → Signal processor	Comparator signal input
10	IREF	→ Signal processor	reference current pin (nom. VDD/2)
11	VDDA		+Supply (analogue) of signal processor
12	VSSA		- Supply (analogue) of signal processor
13	CRIN	X-Tal → Signal processor	Crystal/resonator input of signal processor
14	CROUT	Signal processor → X-Tal	Crystal/resonator output of signal processor
15	VDD1		+Supply for I/O buffers of signal processor
16	VSS1		- Supply for I/O buffers of signal processor
17	CL16	not connected	16,9344MHz clock output
18	MISC	not connected	General purpose DAC output (3-state)
19	DATA	Signal processor → DAC	Serial data output of signal processor (3-state)
20	WCLK	Signal processor → DAC	Word clock output of signal processor (3-state)
21	SCLK	Signal processor → DAC	Serial bit clock output of signal processor (3-state)
22	MOTOR1	Signal processor → Disc motor driver	Motor output1 of signal processor; versatile (3-state)
23	MOTOR2	Signal processor → Disc motor driver	Motor output2 of signal processor; versatile (3-state)
24	V5	not connected	Versatile output pin of signal processor
25	V4	not connected	Versatile output pin of signal processor
26	V3	not connected	Versatile output pin of signal processor
27	KILL	not connected	Kill output, programable (open drain)
28	PORE	µP → Signal processor	Power On Reset enable input (active low)
29	CLA	not connected	4,2336MHz microprocessor clock output
30	DA	µP ↔ Signal processor	Interface data I/O line
31	CL	µP → Signal processor	Interface clock input line
32	RAB	µP → Signal processor	Interface R/W and acknowledge input
33	CFLG	Signal processor →	Correction flag output (open drain)
34-42	not used		
43	VSS2		Digital supply for internal logic of signal processor
44	VDD2		Digital supply for internal logic of signal processor

COMPACT DISC BOARD Copperside view

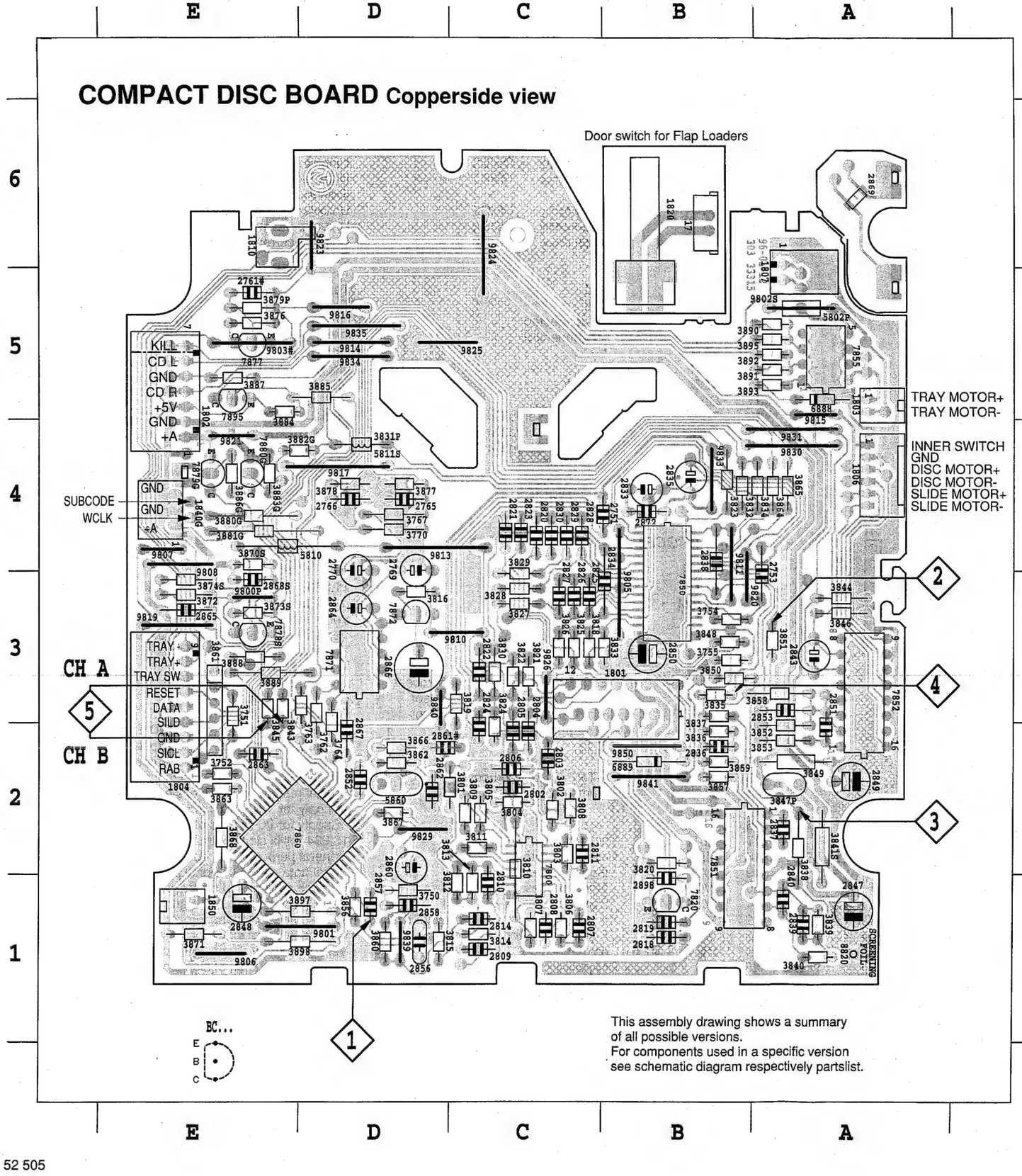

1801 B 3	3754 B 3	3874S E 3
1802 E 5	3755 B 3	3876 E 5
1803 A 5	3762 D 3	3877 D 4
1804 E 3	3763 D 3	3878 D 4
1806 A 4	3764 D 2	3879P E 5
1807 A 5	3767 D 4	3880G E 4
1810 E 6	3770 D 4	3881G E 4
1820 B 5	3801 D 2	3882G E 4
1840G E 4	3802 C 2	3883G E 4
1850 E 1	3803 C 2	3884 E 5
2751 C 4	3804 C 2	3885 D 5
2753 A 3	3805 C 2	3886G E 4
2761# E 5	3806 C 1	3887 E 5
2765 D 4	3807 C 1	3888 E 3
2766 D 4	3808 C 2	3889 E 3
2769 D 3	3809 C 2	3890 A 5
2770 D 3	3810 C 2	3891 A 5
2802 C 2	3811 C 2	3892 A 5
2803 C 2	3812 C 1	3893 A 5
2804 C 2	3813 C 1	3895 A 5
2805 C 2	3814 C 1	3897 D 1
2806 C 2	3815 D 1	3898 D 1
2807 C 1	3816 D 3	5802P A 5
2808 C 1	3818 C 3	5810 E 4
2809 C 1	3819 C 3	5811S D 4
2810 C 1	3820 B 2	5860 D 2
2811 C 2	3821 C 3	6888 A 5
2814 C 1	3822 C 3	6889 B 2
2818 B 1	3823 B 4	7800 C 2
2819 B 1	3824 C 2	7820 B 1
2820 C 4	3825 C 3	7850 B 3
2821 C 4	3826 C 3	7851 B 2
2822 C 3	3827 C 3	7852 A 3
2823 C 4	3828 C 3	7855 A 5
2824 C 2	3829 C 3	7860 D 2
2825 C 3	3830 C 3	7871 D 3
2826 C 3	3831P D 4	7872 D 3
2827 C 3	3832 B 4	7877 E 5
2828 C 4	3833 B 3	7878S E 3
2829 C 4	3834 A 4	7879G E 4
2830 C 4	3835 B 3	7880G E 4
2833 B 4	3836 B 2	7895 E 5
2834 B 3	3837 B 3	9800P E 3
2835 B 4	3838 A 2	9801 D 1
2836 B 2	3839 A 1	9802S A 5
2837 A 2	3840 A 1	9803# E 5
2838 B 4	3841S A 2	9805 B 3
2839 A 1	3843 E 3	9806 E 1
2840 A 1	3844 A 3	9807 E 4
2843 A 3	3845 E 3	9808 E 4
2847 A 1	3846 A 3	9810 C 3
2848 E 1	3847P A 2	9811 B 4
2849 A 2	3848 B 3	9813 D 4
2850 B 3	3849 A 2	9814 D 5
2851 A 2	3850 B 3	9815 A 5
2852 D 2	3851 A 3	9816 D 5
2853 A 3	3852 A 2	9817 D 4
2856 D 1	3853 A 2	9819 E 3
2857 D 1	3856 D 1	9820 B 3
2858 D 1	3857 B 2	9821 E 4
2860 D 2	3858 A 3	9823 D 6
2861# D 2	3859 B 2	9824 C 6
2862 D 2	3860 D 1	9825 D 5
2863 E 2	3861 E 3	9826 C 3
2864 D 3	3862 D 2	9829 D 2
2865 E 3	3863 E 2	9830 A 4
2866 D 3	3864 A 4	9831 A 4
2867 D 2	3865 A 4	9833 B 4
2868S E 3	3866 D 2	9834 D 5
2869 A 6	3867 D 2	9835 D 5
2872 B 4	3868 E 2	9839 D 1
2898 B 1	3870S E 4	9840 D 3
3750 D 1	3871 E 1	9841 B 2
3751 E 3	3872 E 3	9850 B 2
3752 E 2	3873S E 3	

Version related parts

xxxxS for System applications only
xxxxP for Portable applications only
xxxxG for CD Graphics versions only
xxxx# provisional only. Not used yet

COMPACT DISC BOARD

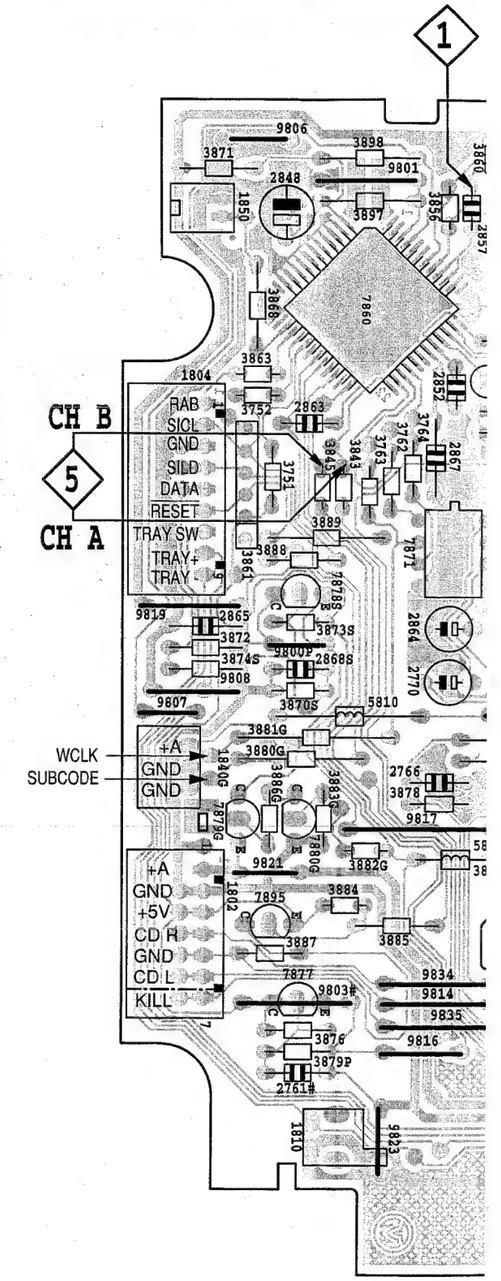

10-6

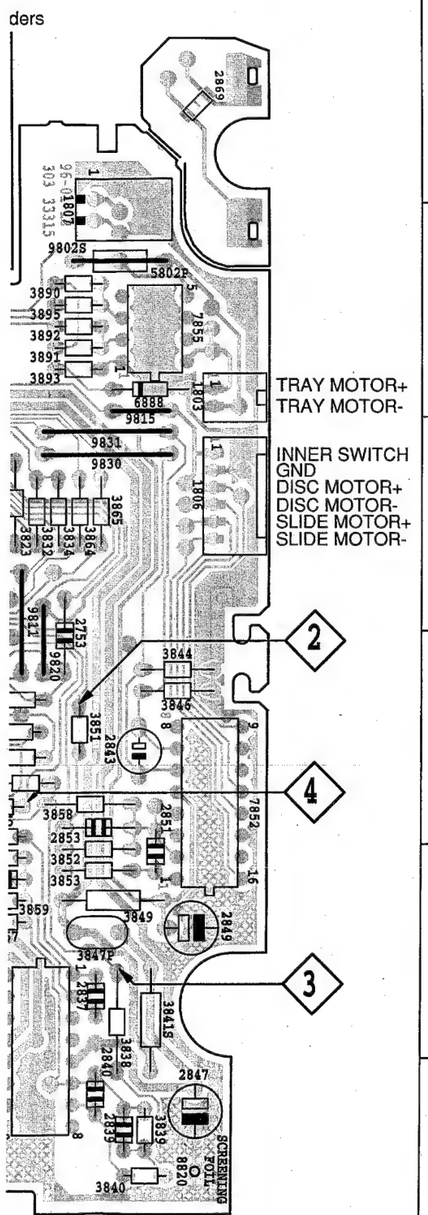

ving shows a summary
ons.
ed in a specific version
ram respectively partslist.

1801 B 3	3754 B 3	3874S E 3
1802 E 5	3755 B 3	3876 E 5
1803 A 5	3762 D 3	3877 D 4
1804 E 3	3763 D 3	3878 D 4
1806 A 4	3764 D 2	3879P E 5
1807 A 5	3767 D 4	3880G E 4
1810 E 6	3770 D 4	3881G E 4
1820 B 5	3801 D 2	3882G E 4
1840G E 4	3802 C 2	3883G E 4
1850 E 1	3803 C 2	3884 E 5
2751 C 4	3804 C 2	3885 D 5
2753 A 3	3805 C 2	3886G E 4
2761# E 5	3806 C 1	3887 E 5
2765 D 4	3807 C 1	3888 E 3
2766 D 4	3808 C 2	3889 E 3
2769 D 3	3809 C 2	3890 A 5
2770 D 3	3810 C 2	3891 A 5
2802 C 2	3811 C 2	3892 A 5
2803 C 2	3812 C 1	3893 A 5
2804 C 2	3813 C 1	3895 A 5
2805 C 2	3814 C 1	3897 D 1
2806 C 2	3815 D 1	3898 D 1
2807 C 1	3816 D 3	5802P A 5
2808 C 1	3818 C 3	5810 E 4
2809 C 1	3819 C 3	5811S D 4
2810 C 1	3820 B 2	5860 D 2
2811 C 2	3821 C 3	6888 A 5
2814 C 1	3822 C 3	6889 B 2
2818 B 1	3823 B 4	7800 C 2
2819 B 1	3824 C 2	7820 B 1
2820 C 4	3825 C 3	7850 B 3
2821 C 4	3826 C 3	7851 B 2
2822 C 3	3827 C 3	7852 A 3
2823 C 4	3828 C 3	7855 A 5
2824 C 2	3829 C 3	7860 D 2
2825 C 3	3830 C 3	7871 D 3
2826 C 3	3831P D 4	7872 D 3
2827 C 3	3832 B 4	7877 E 5
2828 C 4	3833 B 3	7878S E 3
2829 C 4	3834 A 4	7879G E 4
2830 C 4	3835 B 3	7880G E 4
2833 B 4	3836 B 2	7895 E 5
2834 B 3	3837 B 3	9800P E 3
2835 B 4	3838 A 2	9801 D 1
2836 B 2	3839 A 1	9802S A 5
2837 A 2	3840 A 1	9803# E 5
2838 B 4	3841S A 2	9805 B 3
2839 A 1	3843 E 3	9806 E 1
2840 A 1	3844 A 3	9807 E 4
2843 A 3	3845 E 3	9808 E 4
2847 A 1	3846 A 3	9810 C 3
2848 E 1	3847P A 2	9811 B 4
2849 A 2	3848 B 3	9813 D 4
2850 B 3	3849 A 2	9814 D 5
2851 A 2	3850 B 3	9815 A 5
2852 D 2	3851 A 3	9816 D 5
2853 A 3	3852 A 2	9817 D 4
2856 D 1	3853 A 2	9819 E 3
2857 D 1	3856 D 1	9820 B 3
2858 D 1	3857 B 2	9821 E 4
2860 D 2	3858 A 3	9823 D 6
2861# D 2	3859 B 2	9824 C 6
2862 D 2	3860 D 1	9825 D 5
2863 E 2	3861 E 3	9826 C 3
2864 D 3	3862 D 2	9829 D 2
2865 E 3	3863 E 2	9830 A 4
2866 D 3	3864 A 4	9831 A 4
2867 D 2	3865 A 4	9833 B 4
2868S E 3	3866 D 2	9834 D 5
2869 A 6	3867 D 2	9835 D 5
2872 B 4	3868 E 2	9839 D 1
2898 B 1	3870S E 4	9840 D 3
3750 D 1	3871 E 1	9841 B 2
3751 E 3	3872 E 3	9850 B 2
3752 E 2	3873S E 3	

Version related parts

xxxxS for System applications only
xxxxP for Portable applications only
xxxxG for CD Graphics versions only
xxxx# provisional only. Not used yet

COMPACT DISC BOARD Component side view

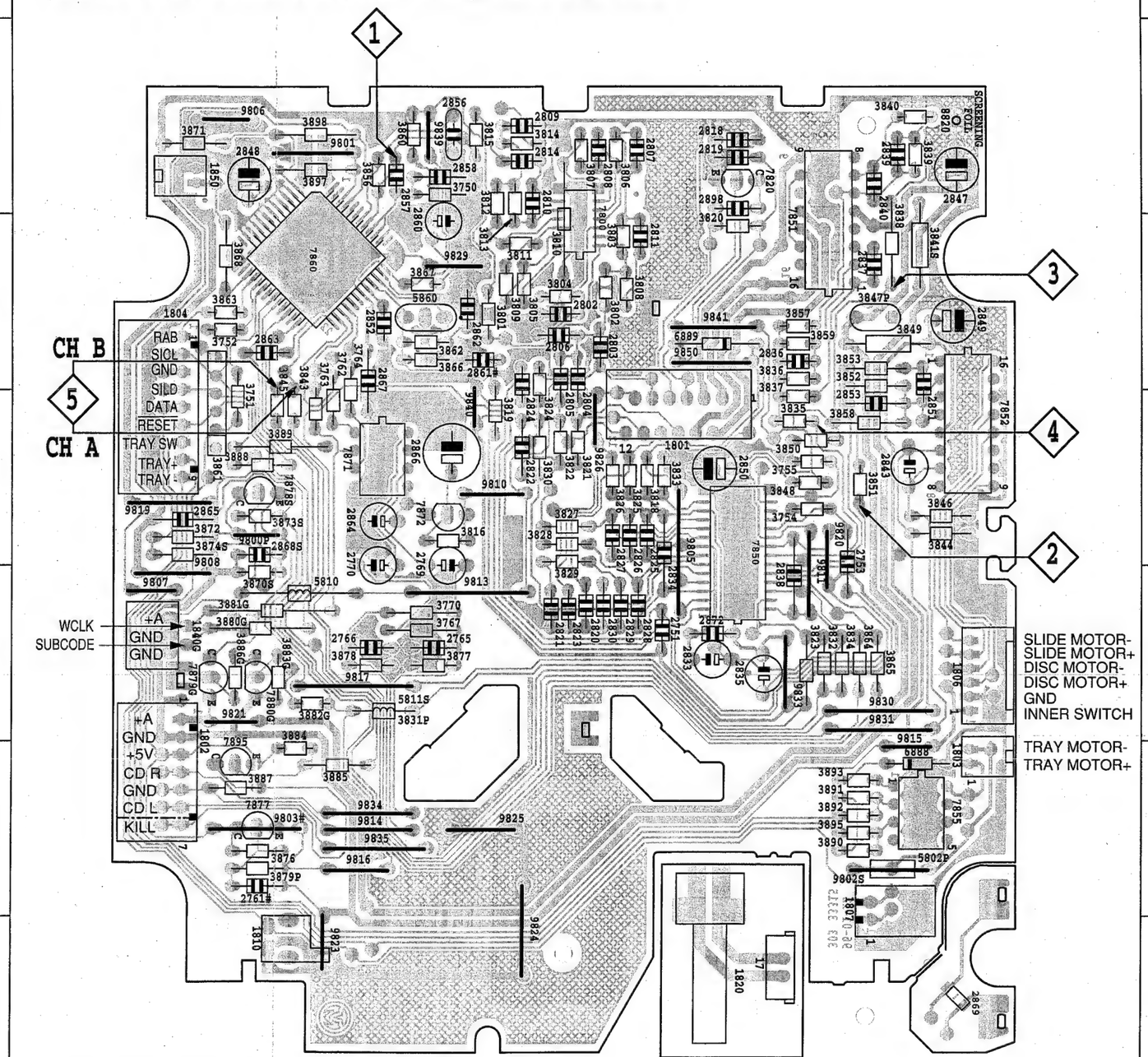

This assembly drawing shows a summary
of all possible versions.
For components used in a specific version
see schematic diagram respectively partslist.

BC...
E
B
C

10-7

CD BOARD

CDM12.1

HF-Preamplifier

eye-pattern

SIGNAL PROCESSOR 7860 SAA7345GP

LASER SWITCH

SERVO-DRIVER 7851 TDA7073A

MOTOR-DRIVER 7852 TDA7073A

DSIC2 TDA1301T/N2

TRACK

FOCUS

SLIDE MOTOR

DISC MOTOR

During Focus search (Service step "Focus search")

PDM

during speed up

during play

during brake

10-7

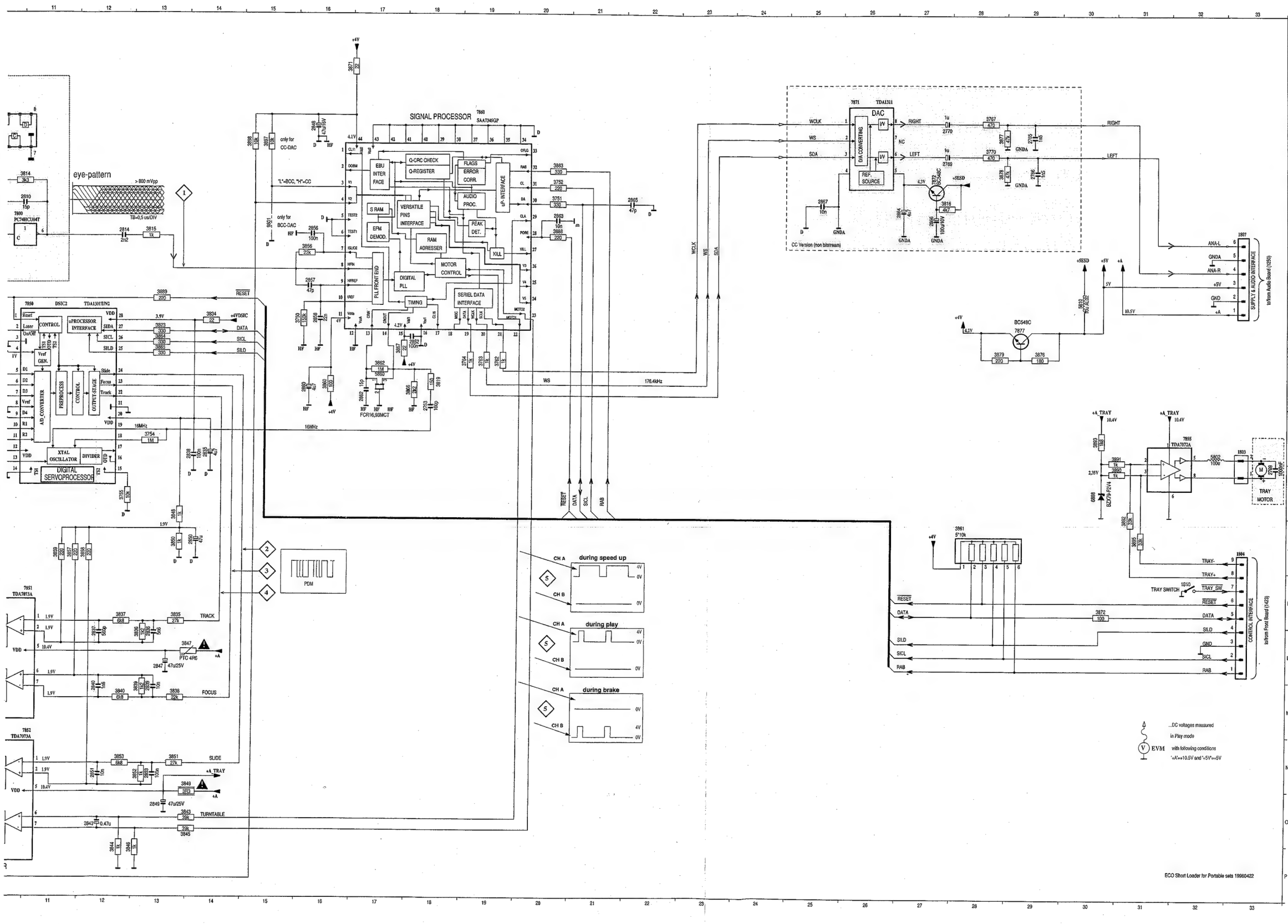

	1801 G 2	3840 M12
	1803 H33	3841 L13
	1804 J33	3843 O13
	1806 N 2	3844 P12
A	1807 D33	3845 O13
	1810 K32	3846 P12
	2751 E10	3847 L13
	2753 G18	3848 I13
	2761 G29	3849 N13
	2765 C29	3850 J13
	2766 C29	3851 N13
	2769 C27	3852 N13
B	2770 B27	3853 N12
	2802 B 9	3856 E16
	2803 D 3	3857 J11
	2804 D 3	3858 J12
	2805 D 3	3859 J11
	2806 E 4	3860 G16
	2807 C 6	3861 I28
C	2808 C 7	3862 G17
	2809 E 9	3863 C20
	2810 D10	3864 F13
	2811 C 5	3865 F13
	2814 D12	3866 G18
	2818 J 4	3867 G17
	2819 J 5	3868 C20
D	2820 I 7	3870 M29
	2821 I 6	3871 A16
	2822 I 5	3872 K30
	2823 I 6	3873 J30
	2824 I 6	3874 J30
	2825 I 7	3876 F29
	2826 I 8	3877 C28
E	2827 I 8	3878 C28
	2828 I 9	3888 D20
	2829 I 9	3889 E13
	2830 I 9	3890 I30
	2833 J10	3891 H30
	2834 J 9	3892 J31
	2835 H14	3893 H30
F	2836 L13	3895 J31
	2837 L12	3897 B15
	2838 H14	3898 B15
	2839 M13	5802 H32
	2840 M12	5810 F30
	2843 O12	5811 J 7
	2847 L12	5860 G17
G	2848 B16	6889 I 4
	2849 N12	7800 D 7
	2850 J14	7800 D 8
	2851 N12	7800 D10
	2852 G18	7800 C 7
	2853 N13	7800 C 6
	2856 D16	7800 E 5
H	2857 E16	7820 F 9
	2858 F16	7850 F10
	2860 G16	7851 K11
	2862 G17	7852 M11
	2863 D20	7855 H31
	2864 D27	7860 B20
	2865 D22	7871 B26
I	2866 D27	7872 C27
	2867 D25	7877 F29
	2868 M29	7878 K29
	2872 J10	
	2898 J 3	
	3750 F15	
	3751 D20	
J	3752 C20	
	3754 H13	
	3755 I12	
	3762 G19	
	3763 G19	
	3764 G19	
	3767 B28	
K	3770 C28	
	3801 B 8	
	3802 D 4	
	3803 C 5	
	3804 D 6	
	3805 D 7	
	3806 B 6	
L	3807 B 8	
	3808 C 5	
	3809 D 8	
	3810 E 8	
	3811 D 8	
	3812 D 9	
	3813 D10	
M	3814 C10	
	3815 D13	
	3816 D27	
	3818 F10	
	3819 G18	
	3820 I 4	
	3821 H 4	
N	3822 H 4	
	3823 F13	
	3824 H 4	
	3825 H 7	
	3826 H 7	
	3827 H 8	
	3828 G 8	
O	3829 G 9	
	3830 G 9	
	3831 J 7	
	3832 J 9	
	3833 I10	
	3834 F14	
	3835 K13	
P	3836 L13	
	3837 K12	
	3838 M13	
	3839 M13	

WARNING

CHARGED CAPACITORS ON THE SERVO BOARD MAY DAMAGE THE CDM-ELECTRONICS WHEN CONNECTING A NEW CDM MECHANISM. THAT´S WHY, BESIDES THE SAFETY MEASURES LIKE
- ***SWITCH OFF POWER SUPPLY***
- ***ESD PROTECTION***

ADDITIONAL ACTIONS MUST BE TAKEN BY THE REPAIR TECHNICIAN.

The following steps have to be done when replacing the CDM mechanism:

1. Disconnect old CDM flexfoil from printed board
2. Connect paperclip to CDM flexfoil to short-circuit flexfoil (fig.1)
3. Short-circuit printed board with **brass-sheet (4822 321 11197)** plugged into the flexfoil connector (fig.2)
4. Remove old CDM mechanism
5. Position new CDM mechanism in its studs
6. Remove short-circuit from printed board connector
7. Remove short-circuit from flexfoil of new CDM
8. Connect new flexfoil to print connector (fig.3)

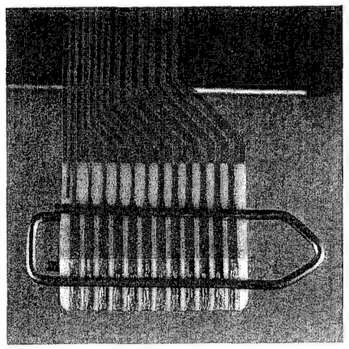

fig.1

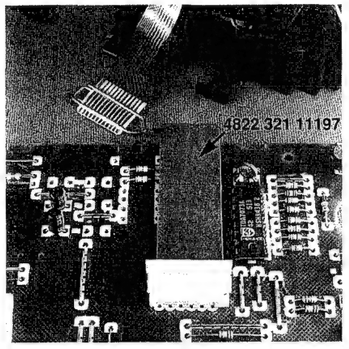

fig.2

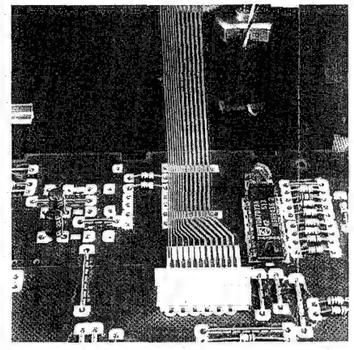

fig.3

Remarks

FAULTFINDING TREE

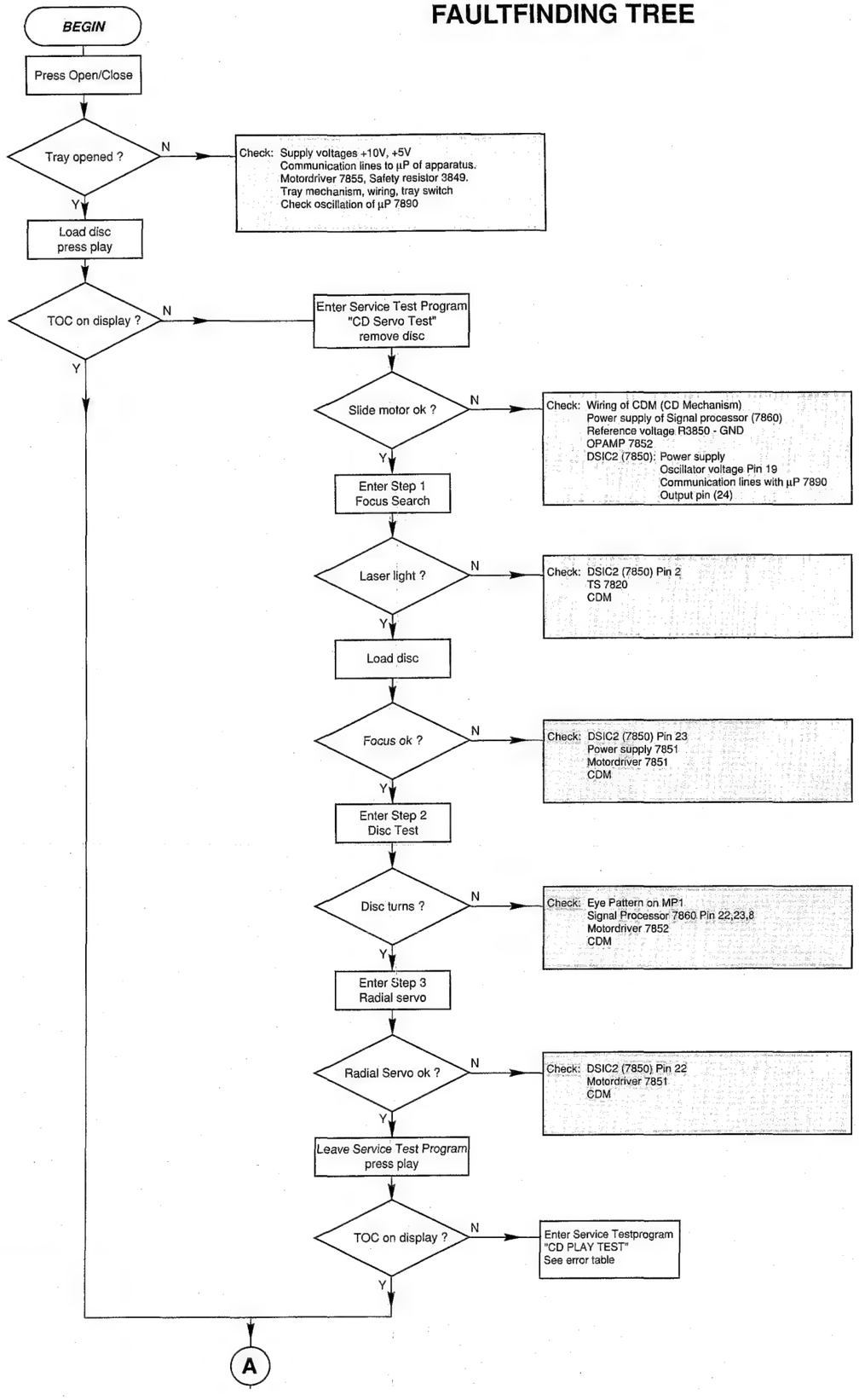

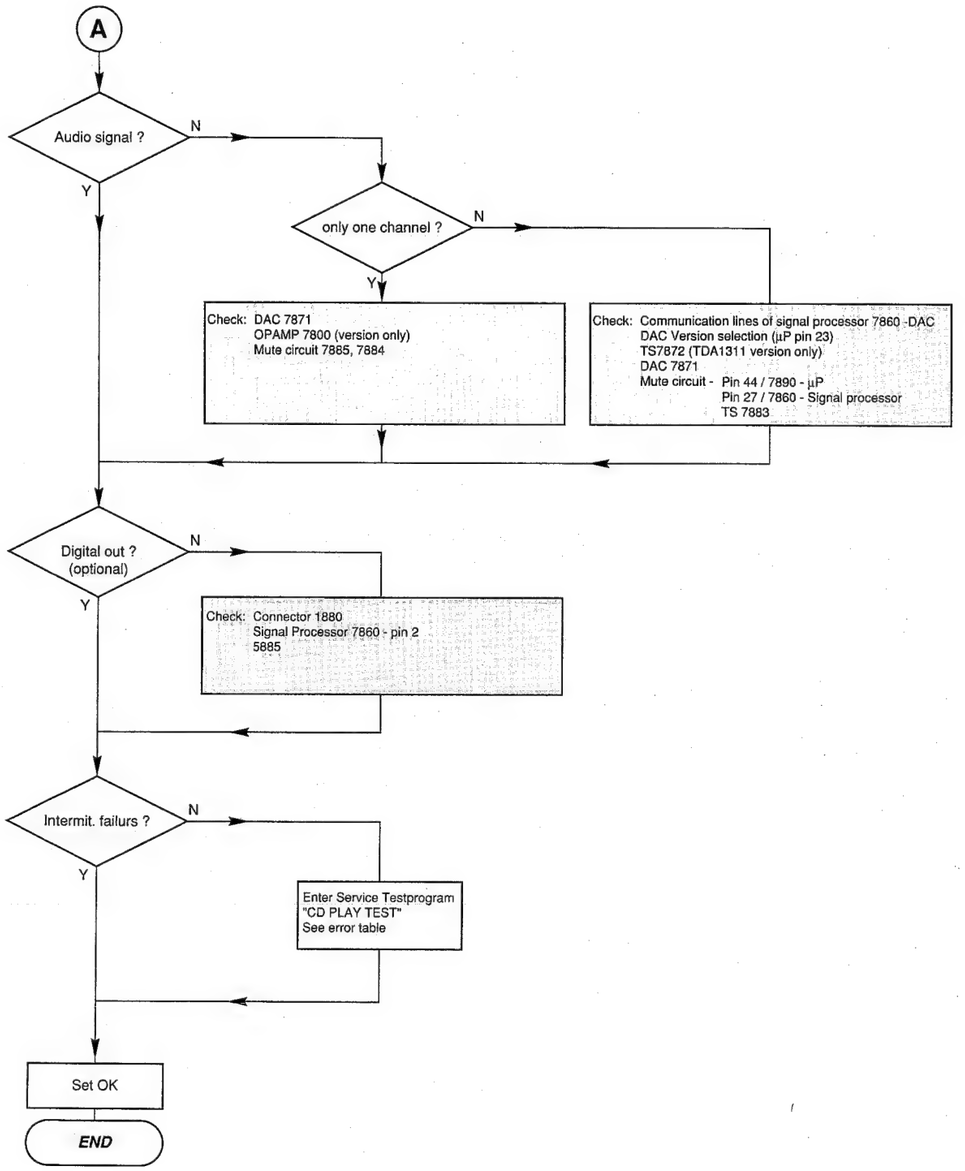
A
Audio signal ?
N
Y
only one channel ?
N
Y
Check: DAC 7871
OPAMP 7800 (version only)
Mute circuit 7885, 7884
Check: Communication lines of signal processor 7860 -DAC
DAC Version selection (µP pin 23)
TS7872 (TDA1311 version only)
DAC 7871
Mute circuit - Pin 44 / 7890 - µP
Pin 27 / 7860 - Signal processor
TS 7883
Digital out ?
(optional)
N
Y
Check: Connector 1880
Signal Processor 7860 - pin 2
5885
Intermit. failurs ?
N
Y
Enter Service Testprogram
"CD PLAY TEST"
See error table
Set OK
END

10-9

Exploded view CD Short Loader

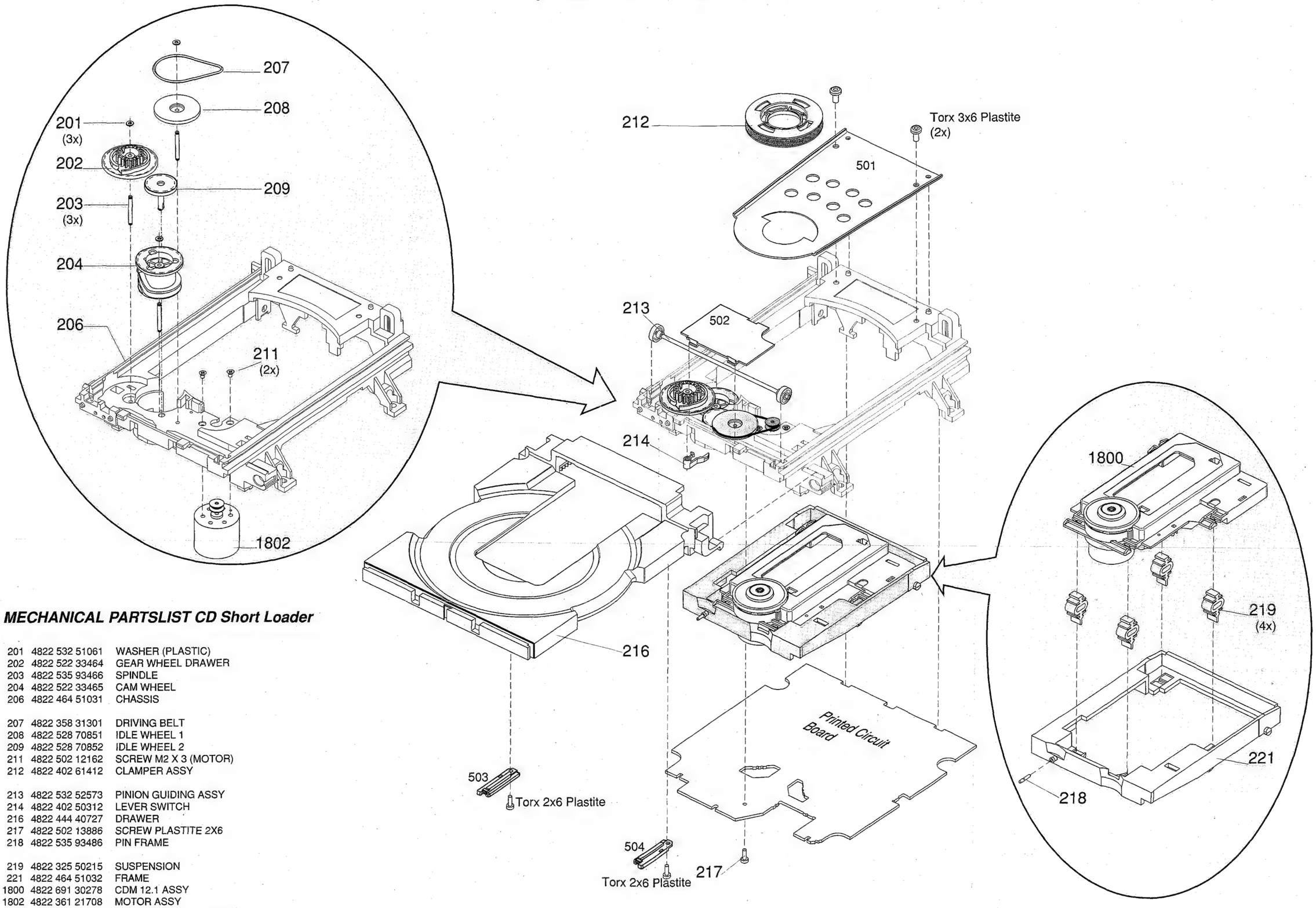

MECHANICAL PARTSLIST CD Short Loader

201	4822 532 51061	WASHER (PLASTIC)
202	4822 522 33464	GEAR WHEEL DRAWER
203	4822 535 93466	SPINDLE
204	4822 522 33465	CAM WHEEL
206	4822 464 51031	CHASSIS
207	4822 358 31301	DRIVING BELT
208	4822 528 70851	IDLE WHEEL 1
209	4822 528 70852	IDLE WHEEL 2
211	4822 502 12162	SCREW M2 X 3 (MOTOR)
212	4822 402 61412	CLAMPER ASSY
213	4822 532 52573	PINION GUIDING ASSY
214	4822 402 50312	LEVER SWITCH
216	4822 444 40727	DRAWER
217	4822 502 13886	SCREW PLASTITE 2X6
218	4822 535 93486	PIN FRAME
219	4822 325 50215	SUSPENSION
221	4822 464 51032	FRAME
1800	4822 691 30278	CDM 12.1 ASSY
1802	4822 361 21708	MOTOR ASSY
	4822 502 30735	SCREW 3 X 6 PLASTITE

MISCELLANEOUS

1810	4822 276 13503	SWITCH, TRAY			

CAPACITORS

2751	4822 121 51387	10nF	20%	16V
2753	4822 122 33195	100pF	10%	50V
2765	4822 126 12878	1,5nF	10%	16V
2766	4822 126 12878	1,5nF	10%	16V
2769	4822 124 41969	1µF	20%	50V
2770	4822 124 41969	1µF	20%	50V
2802	4822 126 12882	100nF	20%	50V
2803	4822 122 10319	82pF	5%	50V
2804	4822 122 10319	82pF	5%	50V
2805	4822 122 33849	150pF	10%	50V
2806	4822 122 33192	27pF	5%	50V
2807	4822 122 33848	47pF	5%	50V
2808	4822 122 33848	47pF	5%	50V
2809	4822 122 33848	47pF	5%	50V
2810	4822 122 10462	15pF	5%	50V
2811	4822 122 33849	150pF	10%	50V
2814	4822 126 12339	2,2nF	10%	16V
2818	4822 126 12882	100nF	20%	50V
2819	4822 126 12882	100nF	20%	50V
2820	4822 122 10459	560pF	10%	50V
2821	4822 126 10053	180pF	10%	50V
2822	4822 126 12787	330pF	10%	50V
2823	4822 126 12878	1,5nF	10%	16V
2824	4822 126 10053	180pF	10%	50V
2825	4822 122 10466	220pF	10%	
2826	4822 122 10466	220pF	10%	
2827	4822 122 10466	220pF	10%	
2828	4822 122 10466	220pF	10%	
2829	4822 122 10466	220pF	10%	
2830	4822 122 10466	220pF	10%	
2833	4822 124 23401	4,7µF	20%	25V
2834	4822 126 12882	100nF	20%	50V
2835	4822 124 23401	4,7µF	20%	25V
2836	4822 126 13098	5,6nF	20%	16V
2837	4822 122 10459	560pF	10%	50V
2838	4822 126 12882	100nF	20%	50V
2839	4822 121 51387	10nF	20%	16V
2840	4822 122 10576	1,8nF	10%	16V
2843	5322 124 41948	0,47uF	20%	50V
2847	4822 124 40433	47µF	20%	25V
2848	4822 124 23178	47µF	20%	16V
2849	4822 124 40433	47µF	20%	25V
2850	4822 124 23178	47µF	20%	16V
2851	4822 121 51387	10nF	20%	16V
2852	4822 126 12882	100nF	20%	50V
2853	4822 126 12882	100nF	20%	50V
2856	5322 121 42578	100nF	10%	100V
2857	4822 122 33848	47pF	5%	50V
2858	4822 126 11585	22nF	20%	50V
2860	4822 124 23401	4,7µF	20%	25V
2862	4822 122 10462	15pF	5%	50V
2863	4822 121 51387	10nF	20%	16V
2864	4822 124 23401	4,7µF	20%	25V
2865	4822 122 33848	47pF	5%	50V
2866	4822 124 42446	100µF	20%	10V

CAPACITORS

2867	4822 121 51387	10nF	20%	16V
2869©	4822 126 11692	1µF	20%	16V
2872	4822 126 12882	100nF	20%	50V
2898	4822 126 12882	100nF	20%	50V

RESISTORS

3750	4822 116 52245	150kΩ	5%	0,16W
3751	4822 116 52219	330Ω	5%	0,5W
3752	4822 116 52215	220Ω	5%	0,16W
3754	4822 116 52235	1MΩ	5%	0,5W
3755	4822 116 83864	10kΩ	5%	0,5W
3762	4822 050 11002	1kΩ	5%	0,2W
3763	4822 050 11002	1kΩ	5%	0,2W
3764	4822 050 11002	1kΩ	5%	0,2W
3767	4822 116 52224	470Ω	5%	0,5W
3770	4822 116 52224	470Ω	5%	0,5W
3801	4822 116 52226	560Ω	5%	0,5W
3802	4822 050 11002	1kΩ	5%	0,2W
3803	4822 111 50499	3,3MΩ	5%	0,2W
3804	4822 116 52296	6,8kΩ	5%	0,5W
3805	4822 116 52257	22kΩ	5%	0,5W
3806	4822 116 83864	10kΩ	5%	0,5W
3807	4822 116 83864	10kΩ	5%	0,5W
3808	4822 116 52284	47kΩ	5%	0,5W
3809	4822 116 52269	3,3kΩ	5%	0,5W
3810	4822 116 52269	3,3kΩ	5%	0,5W
3811	4822 116 52257	22kΩ	5%	0,5W
3812	4822 116 52269	3,3kΩ	5%	0,5W
3813	4822 116 52269	3,3kΩ	5%	0,5W
3814	4822 116 52269	3,3kΩ	5%	0,5W
3815	4822 050 11002	1kΩ	5%	0,2W
3816	4822 116 52283	4,7kΩ	5%	0,5W
3818	4822 116 52283	4,7kΩ	5%	0,5W
3819	4822 116 52211	150Ω	5%	0,5W
3820	4822 050 11002	1kΩ	5%	0,2W
3821	4822 116 52239	120kΩ	5%	0,5W
3822	4822 116 52291	56kΩ	5%	0,5W
3823	4822 116 52219	330Ω	5%	0,5W
3824	4822 116 52239	120kΩ	5%	0,5W
3825	4822 116 83864	10kΩ	5%	0,5W
3826	4822 116 83864	10kΩ	5%	0,5W
3827	4822 116 83864	10kΩ	5%	0,5W
3828	4822 116 83864	10kΩ	5%	0,5W
3829	4822 116 83864	10kΩ	5%	0,5W
3830	4822 116 83864	10kΩ	5%	0,5W
3831	4822 116 80176	1Ω	5%	0,5W
3832	4822 116 52186	22Ω	5%	0,5W
3833	4822 116 83864	10kΩ	5%	0,5W
3834	4822 116 52186	22Ω	5%	0,5W
3835	4822 116 52264	27kΩ	5%	0,5W
3836	4822 116 52207	1,2kΩ	5%	0,5W
3837	4822 116 52296	6,8kΩ	5%	0,5W
3838	4822 116 52257	22kΩ	5%	0,5W
3839	4822 116 52207	1,2kΩ	5%	0,5W
3840	4822 116 52296	6,8kΩ	5%	0,5W
3843	4822 116 83882	39kΩ	5%	0,5W
3844	4822 050 11002	1kΩ	5%	0,2W
3845	4822 116 83882	39kΩ	5%	0,5W
3846	4822 050 11002	1kΩ	5%	0,2W
3847	4822 117 12069	4,6Ω	25%	PTC
3848	4822 050 11002	1kΩ	5%	0,2W

10-10

ELECTRICAL PARTSLIST CD BOARD

RESISTORS

3849	4822 052 10338	3,3Ω		NFR25
3850	4822 050 11002	1kΩ	5%	0,2W
3851	4822 116 52264	27kΩ	5%	0,5W
3852	4822 050 11002	1kΩ	5%	0,2W
3853	4822 116 52296	6,8kΩ	5%	0,5W
3856	4822 116 52257	22kΩ	5%	0,5W
3857	4822 116 52215	220Ω	5%	0,16W
3858	4822 116 52215	220Ω	5%	0,16W
3859	4822 116 52215	220Ω	5%	0,16W
3860	4822 116 52175	100Ω	5%	0,5W
3861	4822 116 90836	RES. NETWORK 5x10kΩ		
3862	4822 116 52235	1MΩ	5%	0,5W
3863	4822 116 52219	330Ω	5%	0,5W
3864	4822 116 52219	330Ω	5%	0,5W
3865	4822 116 52219	330Ω	5%	0,5W
3866	4822 116 52256	2,2kΩ	5%	0,16W
3867	4822 116 52186	22Ω	5%	0,5W
3871	4822 116 52186	22Ω	5%	0,5W
3872	4822 116 52175	100Ω	5%	0,5W
3876	4822 116 52213	180Ω	5%	0,5W
3877	4822 116 52284	47kΩ	5%	0,5W
3878	4822 116 52284	47kΩ	5%	0,5W
3879	4822 116 52215	220Ω	5%	0,16W
3888	4822 116 52215	220Ω	5%	0,16W
3889	4822 116 52215	220Ω	5%	0,16W
3890	4822 050 11002	1kΩ	5%	0,2W
3891	4822 050 11002	1kΩ	5%	0,2W
3892	4822 116 52271	33kΩ	5%	0,16W
3893	4822 116 52249	1,8kΩ	5%	0,16W
3895	4822 116 52271	33kΩ	5%	0,16W
3897	4822 116 83864	10kΩ	5%	0,5W
3898	4822 116 83864	10kΩ	5%	0,5W

COILS

5802	4822 157 50964	100µH
5810	4822 152 20677	10µH
5860	4822 242 81865	CER.RES. 16,93MHz

DIODES

6888	4822 130 80655	BZX79-F2V4
6889	4822 130 34167	BZX79-F6V2

TRANSISTORS

7820	4822 130 41344	BC337-40
7872	4822 130 44196	BC548C
7877	4822 130 44196	BC548C
7878	4822 130 44196	BC548C

INTEGRATED CIRCUITS

7800©	5322 209 11517	PC74HCU04T (6-fold Inverter)
7850©	4822 209 31064	TDA1301T/N1, DSIC2
7851	4822 209 32852	TDA7073A/N2, MOTOR DRIVER
7852	4822 209 32852	TDA7073A/N2, MOTOR DRIVER
7855	4822 209 31519	TDA7072A, MOTOR DRIVER
7860©	4822 209 90618	SAA7345GP/S5, DECODER
7871	4822 209 32421	TDA1311A/N2, DAC

EXPLODED VIEW / Drawing 1

MECHANICAL PARTS

401	4822 454 13035	WORDMARK „PHILIPS“
401	4822 454 13036	WORDMARK „MAGNAVOX“
402	4822 218 10683	REMOTE CONTROL, RC0170
403	4822 218 10716	REMOTE CONTROL RC0206
404	4822 442 00257	ORNAMENTAL COVER, CD TRAY
406	4822 410 10389	RECORDER KEYS, SET
407	4822 443 10232	CASSETTE DOOR ASSY
408	4822 492 51733	SPRING BATT.INTERCONNECTION
409	4822 321 10249	MAINS CORD EUROPE
409	4822 321 10886	MAINS CORD GB
409	4822 321 11231	MAINS CORD USA
411	4822 529 10322	DAMPER, DOOR
412	4822 492 42709	SPRING, OPEN CASSETTE DOOR
413	4822 498 10572	CARRYING HANDLE
414	4822 303 30298	TELESCOPIC ANTENNA
416	4822 290 80313	CONTACT PLATE, BATTERY +
417	4822 492 51961	CONTACT SPRING, BATTERY -
418	4822 443 10233	DOOR, BATTERY
1000	4822 265 20706	MAINS SOCKET, UL POL. USA
1000	4822 267 30738	MAINS SOCKET, IEC
1370	4822 277 21234	VOLTAGE SELECTOR
5001	4822 146 10431	TRANSFORMER MAINS AZ1508,USA
5001	4822 146 10433	TRANSFORMER MAINS AZ1508, EU
5001	4822 146 10434	TRANSFORMER MAINS AZ1508, /01
5001	4822 146 10438	TRANSFORMER MAINS AZ1407, EU
5001	4822 146 10439	TRANSFORMER MAINS AZ1407,USA

Only those parts of which a service code number is stated are normal service parts.

11-1

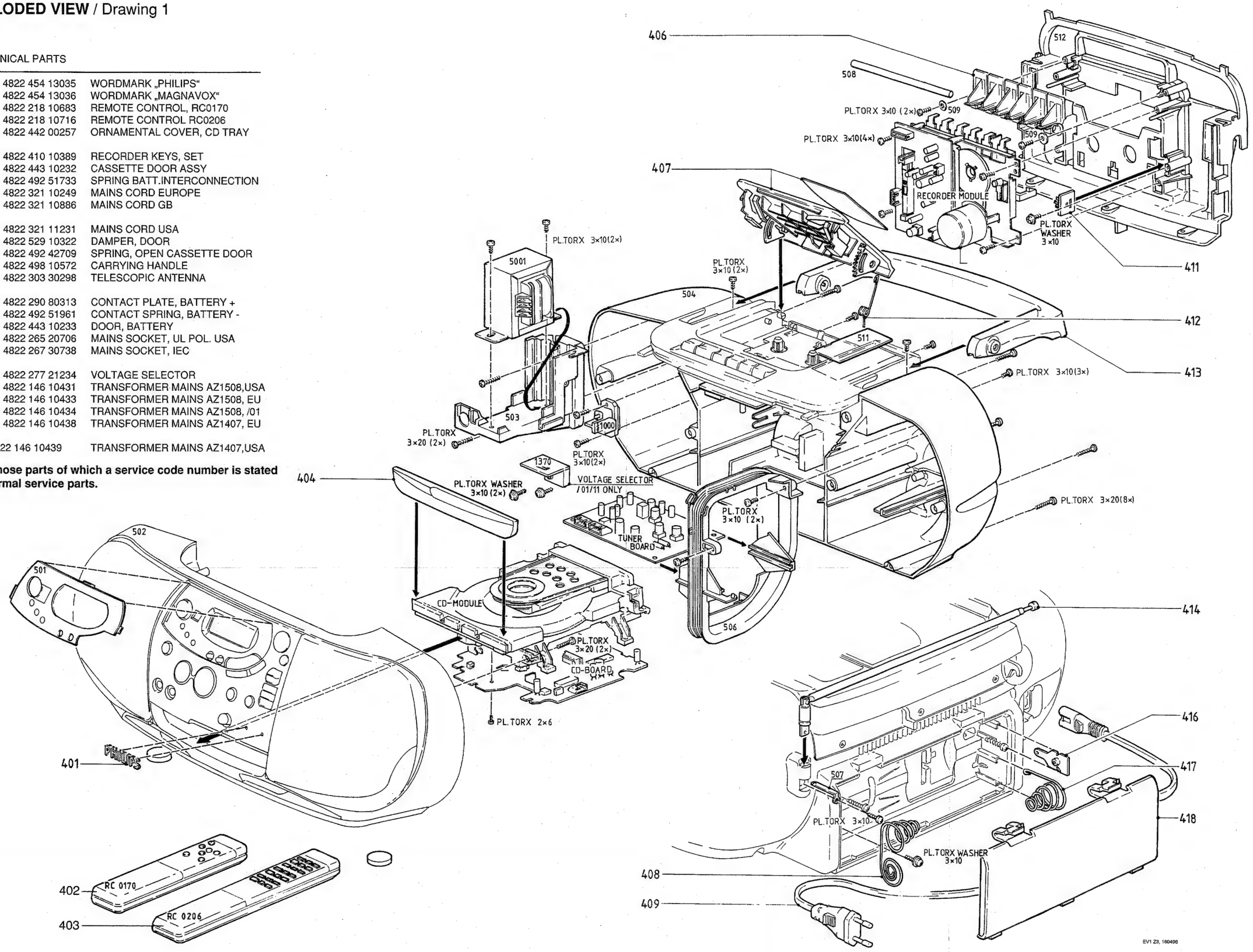

11-2

EXPLODED VIEW / Drawing 2

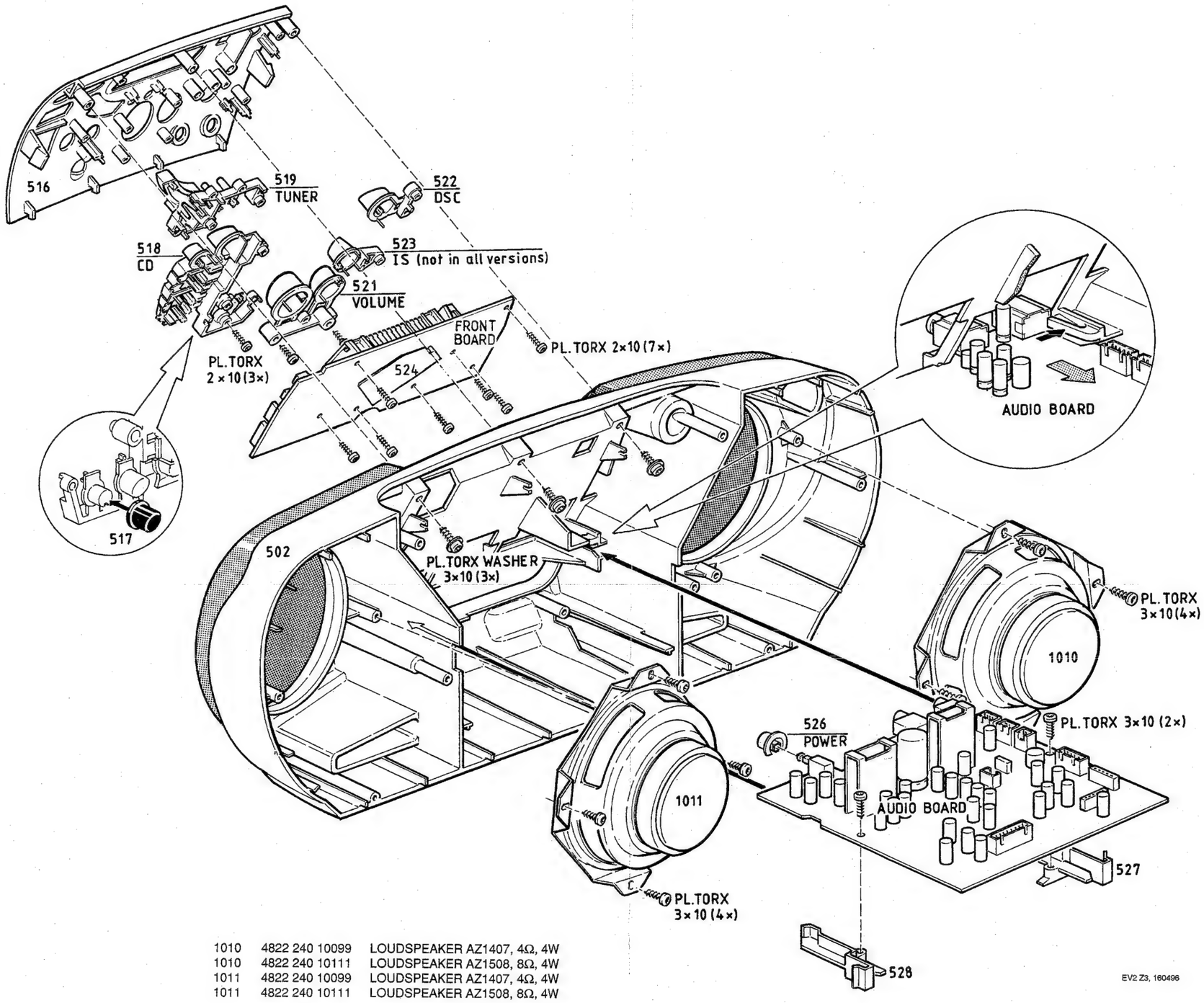

1010	4822 240 10099	LOUDSPEAKER AZ1407, 4Ω, 4W
1010	4822 240 10111	LOUDSPEAKER AZ1508, 8Ω, 4W
1011	4822 240 10099	LOUDSPEAKER AZ1407, 4Ω, 4W
1011	4822 240 10111	LOUDSPEAKER AZ1508, 8Ω, 4W

Only those parts of which a service code number is stated are normal service parts.

ELECTRICAL PARTSLIST

FRONT BOARD

MISCELLANEOUS

1400	4822 276 13114	TACT SWITCH	
1401	4822 276 13114	TACT SWITCH	AZ1508 only
1402	4822 276 13114	TACT SWITCH	
1403	4822 276 13114	TACT SWITCH	
1404	4822 276 13114	TACT SWITCH	
1406	4822 276 13114	TACT SWITCH	
1407	4822 276 13114	TACT SWITCH	
1408	4822 276 13114	TACT SWITCH	
1409	4822 276 13114	TACT SWITCH	
1410	4822 276 13114	TACT SWITCH	
1411	4822 276 13114	TACT SWITCH	
1412	4822 276 13114	TACT SWITCH	
1413	4822 276 13114	TACT SWITCH	
1414	4822 276 13114	TACT SWITCH	
1415	4822 276 13114	TACT SWITCH	
1416	4822 276 13114	TACT SWITCH	
1417	4822 276 13114	TACT SWITCH	
1418	4822 276 13114	TACT SWITCH	
1419	4822 276 13114	TACT SWITCH	
1420	4822 135 00034	LCD, LPH6364-1	
7450	4822 130 10165	GP1U28XP, INFRARED EYE	

CAPACITORS

2401©	4822 124 11563	4,7µF	20%	6,3V	
2402	4822 126 12882	100nF	20%	50V	
2403©	4822 122 33496	100nF	10%	63V	
2410©	5322 122 32531	100pF	5%	50V	
2415©	5322 122 34123	1nF	10%	50V	
2421©	5322 122 32531	100pF	5%	50V	
2450	4822 124 40246	4,7µF	20%	63V	
2460©	4822 122 33177	10nF	20%	50V	
2461©	4822 122 33177	10nF	20%	50V	
2468©	5322 122 32531	100pF	5%	50V	
2475©	4822 122 33177	10nF	20%	50V	
2480©	4822 122 33496	100nF	10%	63V	

RESISTORS

3001©	4822 051 20689	68Ω	5%	0,1W	AZ1508 only
3002©	4822 051 20689	68Ω	5%	0,1W	AZ1508 only
3400	4822 116 52191	33Ω	5%	0,5W	
3401©	4822 117 11449	2,2kΩ	1%	0,1W	
3402©	4822 051 10102	1kΩ	2%	0,25W	
3403©	4822 117 11449	2,2kΩ	1%	0,1W	
3404©	4822 117 11449	2,2kΩ	1%	0,1W	
3405©	4822 117 11449	2,2kΩ	1%	0,1W	
3406©	4822 117 11449	2,2kΩ	1%	0,1W	
3407©	4822 117 11449	2,2kΩ	1%	0,1W	
3408©	4822 051 20103	10kΩ	5%	0,1W	
3409©	4822 051 20103	10kΩ	5%	0,1W	
3410©	4822 051 20103	10kΩ	5%	0,1W	
3411©	4822 051 20103	10kΩ	5%	0,1W	
3412	4822 116 52284	47kΩ	5%	0,5W	AZ1508 only
3413©	4822 051 20103	10kΩ	5%	0,1W	
3414©	4822 051 20103	10kΩ	5%	0,1W	
3415©	4822 117 11449	2,2kΩ	1%	0,1W	AZ1508 only
3416©	4822 051 20181	180Ω	5%	0,1W	AZ1508 only
3418	4822 116 83864	10kΩ	5%	0,5W	
3419©	4822 117 11449	2,2kΩ	1%	0,1W	
3421	4822 116 52271	33kΩ	5%	0,16W	
3422©	4822 117 11449	2,2kΩ	1%	0,1W	
3423©	4822 051 20103	10kΩ	5%	0,5W	
3424	4822 116 52271	33kΩ	5%	0,16W	
3425©	4822 051 20339	33Ω	5%	0,1W	

RESISTORS

3426	4822 116 52195	47Ω	5%	0,5W
3427©	4822 117 11449	2,2kΩ	1%	0,1W
3428©	4822 117 11449	2,2kΩ	1%	0,1W
3429©	4822 117 11449	2,2kΩ	1%	0,1W
3430©	4822 051 10102	1kΩ	2%	0,25W
3431©	4822 051 10102	1kΩ	2%	0,25W
3432©	4822 117 11139	1,5kΩ	5%	0,1W
3433©	4822 117 11139	1,5kΩ	5%	0,1W
3434©	4822 117 11139	1,5kΩ	5%	0,1W
3435©	4822 051 20103	10kΩ	5%	0,1W
3436©	4822 051 20103	10kΩ	5%	0,1W
3441©	4822 051 20333	33kΩ	5%	0,1W
3442©	4822 051 20473	47kΩ	5%	0,1W
3443©	4822 051 20181	180Ω	5%	0,1W
3445	4822 116 52271	33kΩ	5%	0,16W
3446©	4822 051 20104	100kΩ	5%	0,1W
3447	4822 116 52271	33kΩ	5%	0,16W
3450©	4822 051 20271	270Ω	5%	0,1W
3451	4822 116 52256	2,2kΩ	5%	0,1W
3452©	4822 051 20103	10kΩ	5%	0,1W
3458©	4822 051 20223	22kΩ	5%	0,1W
3459©	4822 051 10102	1kΩ	2%	0,25W
3460©	4822 117 11449	2,2kΩ	1%	0,1W
3461	4822 116 52284	47kΩ	5%	0,5W
3462©	4822 117 11449	2,2kΩ	1%	0,1W
3463	4822 116 52284	47kΩ	5%	0,5W
3464©	4822 117 11449	2,2kΩ	1%	0,1W
3465	4822 116 52284	47kΩ	5%	0,5W
3466©	4822 051 20221	220Ω	5%	0,1W
3472©	4822 051 20471	470Ω	5%	0,1W
3473©	4822 051 20471	470Ω	5%	0,1W
3474©	4822 051 20471	470Ω	5%	0,1W
3475©	4822 117 11449	2,2kΩ	1%	0,1W
3478©	4822 051 10102	1kΩ	2%	0,25W
3479©	4822 117 11449	2,2kΩ	1%	0,1W
3480©	4822 051 20473	47kΩ	5%	0,1W
3481©	4822 051 20473	47kΩ	5%	0,1W
3482©	4822 117 11449	2,2kΩ	1%	0,1W
3483©	4822 117 11449	2,2kΩ	1%	0,1W
3484	4822 116 52271	33kΩ	5%	0,16W
3485	4822 116 52271	33kΩ	5%	0,16W
3486	4822 116 52271	33kΩ	5%	0,16W
3487	4822 116 52271	33kΩ	5%	0,16W
3488	4822 116 52271	33kΩ	5%	0,16W
3489©	4822 051 20103	10kΩ	5%	0,1W
3490©	4822 051 20472	4,7kΩ	5%	0,1W
3491	4822 116 83864	10kΩ	5%	0,5W
3492©	4822 051 20103	10kΩ	5%	0,1W
3493©	4822 117 11449	2,2kΩ	1%	0,1W
3494©	4822 051 10102	1kΩ	2%	0,25W
3495©	4822 117 11449	2,2kΩ	1%	0,1W
3496	4822 050 11002	1kΩ	5%	0,2W
3497©	4822 051 20103	10kΩ	5%	0,5W
3499	4822 116 52256	2,2kΩ	5%	0,16W
3500©	4822 051 10102	1kΩ	2%	0,25W
3501©	4822 051 10102	1kΩ	2%	0,25W
3502©	4822 117 11449	2,2kΩ	1%	0,1W
3503©	4822 051 20471	470Ω	5%	0,1W
3504©	4822 051 20471	470Ω	5%	0,1W
3505©	4822 051 20471	470Ω	5%	0,1W
3506©	4822 051 20471	470Ω	5%	0,1W
3507©	4822 051 10008	CHIP JUMPER 1206		
4400©	4822 051 10008	CHIP JUMPER 1206		
4401©	4822 051 10008	CHIP JUMPER 1206		

ELECTRICAL PARTSLIST

FRONT BOARD

RESISTORS

4402©	4822 051 10008	CHIP JUMPER 1206	
4403©	4822 051 10008	CHIP JUMPER 1206	
4404©	4822 051 10008	CHIP JUMPER 1206	
4405©	4822 051 10008	CHIP JUMPER 1206	
4406©	4822 051 10008	CHIP JUMPER 1206	
4407©	4822 051 10008	CHIP JUMPER 1206	
4408©	4822 051 10008	CHIP JUMPER 1206	
4409©	4822 051 10008	CHIP JUMPER 1206	
4419©	4822 051 10008	CHIP JUMPER 1206	

COILS

5401	4822 242 73769	CER. RES. 4,19MHz	

DIODES

6001	4822 130 10418	LED, LTL-16KGE	AZ1508 only
6002	4822 130 10418	LED, LTL-16KGE	AZ1508 only
6003	4822 130 10418	LED, LTL-16KGE	AZ1508 only
6004	4822 130 10418	LED, LTL-16KGE	AZ1508 only
6400	4822 130 31554	BZX79-F4V3	
6401	4822 130 30621	1N4148	
6402	4822 130 30621	1N4148	
6416	4822 130 10418	LED, LTL-16KGE	AZ1508 only
6460	4822 130 10418	LED, LTL-16KGE	
6461	4822 130 10418	LED, LTL-16KGE	
6462	4822 130 10418	LED, LTL-16KGE	

TRANSISTORS

7402©	5322 130 41982	BC848B	
7403©	5322 130 41982	BC848B	
7404©	5322 130 41982	BC848B	
7405©	5322 130 41982	BC848B	
7406©	5322 130 41983	BC858B	
7416©	5322 130 41982	BC848B	AZ1508 only
7460©	5322 130 41983	BC858B	
7461©	5322 130 41983	BC858B	
7462©	5322 130 41983	BC858B	

INTEGRATED CIRCUITS

7400©	4822 209 13155	TMP87CK20AF-JWLDV83251
7480©	4822 209 13156	ST24C01M6, EEPROM

TUNER BOARD (ECO 5 PA)

CAPACITORS

2101©	5322 122 32531	100pF	5%	50V	
2102©	4822 122 33177	10nF	20%	50V	
2103©	5322 122 34123	1nF	10%	50V	
2104	4822 122 33195	100pF	10%	50V	
2106	4822 125 50355	4,2-20pF TRIMCAP.			FM/MW/LW version
2106	4822 125 60101	3-11pF TRIMCAP.			FM/AM version
2107	4822 121 51319	1µF	20%	50V	
2108©	5322 122 32531	100pF	5%	50V	FM/MW/LW version
2109©	5322 122 32448	10pF	5%	50V	FM/MW/LW version
2120©	5322 122 31946	27pF	5%	50V	FM/MW/LW version
2120©	5322 122 32658	22pF	5%	50V	FM/AM version
2122©	4822 122 33891	3,3nF	10%	63V	FM/MW/LW version
2123	4822 121 51254	390pF	1%	400V	FM/MW/LW version
2125	4822 121 51381	560pF	1%	400V	
2126©	5322 122 31863	330pF	5%	50V	
2127©	4822 122 32927	220nF	10%	63V	
2128	4822 124 41579	10µF	20%	50V	
2129	4822 124 41584	100µF	20%	10V	
2130	4822 126 11585	22nF	20%	50V	
2131©	4822 122 33325	470nF	20%	50V	
2132©	4822 122 33325	470nF	20%	50V	
2133	4822 124 40242	1µF	20%	63V	
2134©	4822 122 33128	15nF	10%	63V	not for USA
2134©	5322 122 32654	22nF	10%	63V	for USA only
2135	4822 124 40746	0,22µF	20%	63V	
2136©	4822 122 33128	15nF	10%	63V	not for USA
2136©	5322 122 32654	22nF	10%	63V	for USA only
2137	4822 124 40746	0,22µF	20%	63V	
2138	4822 124 41576	2,2µF	20%	50V	
2140	4822 121 51252	470nF	5%	63V	
2141©	4822 122 31947	100nF	20%	50V	
2142©	4822 122 31947	100nF	20%	50V	
2143©	4822 122 32927	220nF	10%	63V	
2144	4822 124 40242	1µF	20%	63V	
2145©	4822 122 33575	220pF	5%	50V	
2146©	4822 122 33575	220pF	5%	50V	
2147©	4822 122 33575	220pF	5%	50V	
2148	4822 126 11585	22nF	20%	50V	
2149©	5322 122 32654	22nF	10%	63V	
2150©	4822 122 31947	100nF	20%	50V	
2152©	4822 122 33342	33nF	10%	63V	not for East Europe
2152©	5322 116 80853	560pF	5%	63V	for East Europe only
2153©	4822 122 32139	12pF	5%	63V	for East Europe only
2153©	5322 122 32481	15pF	5%	50V	not for East Europe
2155	4822 125 60101	3-11pF TRIMCAP.			
2158©	5322 122 32448	10pF	5%	50V	FM/MW/LW version
2159©	5322 122 32659	33pF	5%	50V	
2160©	5322 122 32654	22nF	10%	63V	FM/AM version
2161©	4822 122 31947	100nF	20%	50V	FM/MW/LW version
2163©	4822 122 31947	100nF	20%	50V	FM/MW/LW version
2165©	4822 122 31947	100nF	20%	50V	
2166©	5322 122 34123	1nF	10%	50V	
2167©	4822 122 32139	12pF	5%	63V	

RESISTORS

3101©	4822 051 20473	47kΩ	5%	0,1W	not for East Europe
3101©	4822 051 20562	5,6kΩ	5%	0,1W	for East Europe only
3102©	4822 051 20104	100kΩ	5%	0,1W	
3103©	4822 051 20183	18kΩ	5%	0,1W	
3104©	4822 051 20181	180Ω	5%	0,1W	
3105	4822 116 83872	220R	5%	0,5W	
3108©	4822 117 11449	2,2kΩ	1%	0,1W	FM/MW/LW version
3109©	4822 051 20332	3,3kΩ	5%	0,1W	FM/MW/LW version
3110	4822 116 52195	47Ω	5%	0,5W	

ELECTRICAL PARTSLIST

TUNER BOARD (ECO 5 PA)

RESISTORS

3123©	4822 051 20472	4,7kΩ	5%	0,1W		FM/MW/LW version
3125©	4822 051 20103	10kΩ	5%	0,1W		FM/MW/LW version
3128©	4822 117 11449	2,2kΩ	1%	0,1W		FM/MW/LW version
3132	4822 116 52195	47Ω	5%	0,5W		
3134©	4822 051 20224	220kΩ	5%	0,1W		
3137©	4822 051 20223	22kΩ	5%	0,1W		FM/MW/LW version
3140©	4822 051 20008	CHIP JUMPER 0805				5120=CDA10.7MG40K
3140©	4822 117 10353	150Ω	5%	0,1W		5120=CDA10.7MG61KA
3141©	4822 051 20563	56kΩ	5%	0,1W		
3142	4822 100 11163	100kΩ TRIMPOT LIN.				
3145©	4822 117 11449	2,2kΩ	1%	0,1W		
3146©	4822 051 20229	22Ω	5%	0,1W		
3152	4822 116 52224	470Ω	5%	0,5W		
3153©	4822 051 20471	470Ω	5%	0,1W		
3154	4822 116 52206	120Ω	5%	0,5W		
3155©	4822 051 20229	22Ω	5%	0,1W		
3156©	4822 051 20104	100kΩ	5%	0,1W		for /01 only
3157	4822 116 52234	100kΩ	5%	0,5W		for East Europe only
3158	4822 116 52224	470Ω	5%	0,5W		
3159	4822 116 52224	470Ω	5%	0,5W		
3160	4822 116 52224	470Ω	5%	0,5W		
3161	4822 116 52224	470Ω	5%	0,5W		
3167©	4822 051 20121	120Ω	5%	0,1W		
3169©	4822 051 20154	150kΩ	5%	0,1W		
3170	4822 116 52234	100kΩ	5%	0,5W		not for FM/MW/LW Europe
3173	4822 116 52219	330Ω	5%	0,5W		
4101©	4822 051 20008	CHIP JUMPER 0805				FM/AM version
4102©	4822 051 20008	CHIP JUMPER 0805				FM/AM version
4102©	4822 051 20334	330kΩ	5%	0,1W		FM/MW/LW version
4103©	4822 051 20008	CHIP JUMPER 0805				
4104©	4822 051 20008	CHIP JUMPER 0805				
4105©	4822 051 20008	CHIP JUMPER 0805				
4106©	4822 051 20008	CHIP JUMPER 0805				
4108©	4822 051 20008	CHIP JUMPER 0805				
4111©	4822 051 20008	CHIP JUMPER 0805				
4120©	4822 051 20008	CHIP JUMPER 0805				
4150©	4822 051 10008	CHIP JUMPER 1206				
4151©	4822 051 20008	CHIP JUMPER 0805				FM/MW/LW version
4152©	4822 051 10008	CHIP JUMPER 1206				
4153©	4822 051 10008	CHIP JUMPER 1206				
4154©	4822 051 10008	CHIP JUMPER 1206				
4155©	4822 051 10008	CHIP JUMPER 1206				FM/MW/LW version
4156©	4822 051 20008	CHIP JUMPER 0805				FM/MW/LW version
4157©	4822 051 10008	CHIP JUMPER 1206				
4158©	4822 051 10008	CHIP JUMPER 1206				
4159©	4822 051 10008	CHIP JUMPER 1206				
4163©	4822 051 20008	CHIP JUMPER 0805				layout stage .7 onwards

COILS

5102	4822 157 71634	RF-COIL MW
5103	4822 157 71635	RF-COIL LW
5109	4822 242 70665	CER. FILTER 10,7MHz
5110	4822 242 70665	CER. FILTER 10,7MHz
5111	4822 158 60511	AM-IF FILTER 450kHz
5112	4822 157 70302	AM-IF FILTER 450kHz
5114	4822 157 70302	AM-IF FILTER 450kHz (AM AFC)
5120	4822 242 10251	CER. DISCRIMINATOR 10.7MG61KA-TF21
5120	4822 242 82065	CER. DISCRIMINATOR 10.7MG40K
5121	4822 242 10261	QUARTZ 75KHZ
5122	4822 157 60517	OSCILLATOR COIL LW
5123	4822 157 60517	OSCILLATOR COIL MW
5130	4822 156 30947	RF COIL 1,5 TURNS
5131	4822 156 30947	RF COIL 1,5 TURNS

DIODES

6103	4822 130 30621	1N4148
6104	4822 130 30621	1N4148
6105©	4822 130 83075	HN1V02H (TUNING DIODE)
6107	4822 130 34488	BZX79-C11
6120	4822 130 30621	1N4148
6130©	4822 130 82833	1SV228 (TUNING DIODE)
6131©	4822 130 82833	1SV228 (TUNING DIODE)

TRANSISTORS

7102	4822 130 60093	2SA838B
7104	5322 130 44779	BC338-40
7105	5322 130 44779	BC338-40
7109©	5322 130 41983	BC858B
7111©	5322 130 42136	BC848C
7122©	5322 130 42136	BC848C
7124©	5322 130 42136	BC848C

INTEGRATED CIRCUITS

7101©	4822 209 90924	TEA5757H/V1, RADIO IC

ELECTRICAL PARTSLIST

AUDIO BOARD

MISCELLANEOUS

1260	4822 276 13483	SWITCH PUSH, POWER	
1268	4822 071 52502	⚠ FUSE T 2,5A	not for AZ1508/17
1268	4822 252 51121	⚠ FUSE 3,15A	for AZ1508/17 only
1270	4822 265 10489	SOCKET MICRO 3,5MM JACK	
1330	4822 267 31468	SOCKET HEADPH. 3,5MM JACK	

CAPACITORS

2250	4822 124 40746	0,22µF	20%	63V	
2251	4822 124 40746	0,22µF	20%	63V	
2252	4822 124 40784	3300µF	20%	16V	for AZ1407 only
2252	4822 124 41458	4700µF	20%	16V	for AZ1508 only
2254	4822 126 11585	22nF	20%	50V	
2255	4822 124 40433	47µF	20%	25V	
2257	4822 122 33197	1nF	10%	50V	
2270	4822 124 40746	0,22µF	20%	63V	
2271	4822 124 40746	0,22µF	20%	63V	
2274	4822 122 33197	1nF	10%	50V	
2275	4822 122 33197	1nF	10%	50V	
2276	4822 121 41857	10nF	5%	250V	
2277	4822 121 41857	10nF	5%	250V	
2278	4822 121 41856	22nF	5%	250V	
2279	4822 121 41856	22nF	5%	250V	
2280	4822 124 40246	4,7µF	20%	63V	
2281	4822 124 40246	4,7µF	20%	63V	
2282	4822 126 12339	2,2nF	10%	16V	
2283	4822 126 12339	2,2nF	10%	16V	
2284	4822 124 40242	1µF	20%	63V	
2285	4822 122 33197	1nF	10%	50V	
2286	4822 124 41576	2,2µF	20%	50V	
2287	4822 124 40433	47µF	20%	25V	
2288	4822 124 40246	4,7µF	20%	63V	
2289	4822 124 40246	4,7µF	20%	63V	
2292	4822 126 11585	22nF	20%	50V	
2293	4822 126 11585	22nF	20%	50V	
2301	4822 124 41579	10µF	20%	50V	
2302	4822 124 40433	47µF	20%	25V	
2303	4822 124 40242	1µF	20%	63V	
2304	4822 124 40242	1µF	20%	63V	
2305	4822 124 41584	100µF	20%	10V	
2306	4822 124 41584	100µF	20%	10V	
2307	4822 122 33197	1nF	10%	50V	
2308	4822 122 33197	1nF	10%	50V	
2310	4822 124 40196	220µF	20%	16V	
2313	4822 122 33197	1nF	10%	50V	
2314	4822 122 33197	1nF	10%	50V	
2330	4822 124 40433	47µF	20%	25V	
2331	4822 124 40433	47µF	20%	25V	for AZ1407 only
2332	4822 126 12882	100nF	20%	50V	
2333	4822 126 12882	100nF	20%	50V	
2334	4822 122 33169	680pF	10%	50V	
2335	4822 122 33169	680pF	10%	50V	for AZ1407 only
2336	4822 124 41596	22µF	20%	50V	for AZ1508 only
2337	4822 124 40433	47µF	20%	25V	
2340	4822 124 40433	47µF	20%	25V	
2341	4822 124 40433	47µF	20%	25V	
2342	4822 124 41407	0,47µF	20%	63V	
2343	4822 124 41407	0,47µF	20%	63V	
2344	4822 124 40184	1000µF	20%	10V	for AZ1407 only
2345	4822 124 40184	1000µF	20%	10V	for AZ1407 only
2349	4822 124 40433	47µF	20%	25V	for AZ1508 only
2350	4822 124 41596	22µF	20%	50V	for AZ1508 only
2351	4822 124 40433	47µF	20%	25V	for AZ1508 only
2352	4822 122 33169	680pF	10%	50V	for AZ1508 only
2354	4822 124 40433	47µF	20%	25V	for AZ1508 only

CAPACITORS

2355	4822 124 40433	47µF	20%	25V	for AZ1508 only
2356	4822 124 41407	0,47µF	20%	63V	for AZ1508 only
2357	4822 124 41407	0,47µF	20%	63V	for AZ1508 only
2361	4822 124 40196	220µF	20%	16V	
2362	4822 124 40433	47µF	20%	25V	
2363	4822 124 40433	47µF	20%	25V	
2380	4822 124 41525	100µF	20%	25V	
2381	4822 124 40746	0,22µF	20%	63V	
2382	4822 122 33195	100pF	10%	50V	
2383	4822 121 51387	10nF	20%	16V	
2384	4822 121 51387	10nF	20%	16V	
2385	4822 121 51387	10nF	20%	16V	
2386	4822 122 33197	1nF	10%	50V	
2387	4822 124 41579	10µF	20%	50V	
2388	4822 124 41579	10µF	20%	50V	
2389	4822 122 33197	1nF	10%	50V	
2390	4822 122 33197	1nF	10%	50V	
2391	4822 124 41596	22µF	20%	50V	
2392	4822 122 33197	1nF	10%	50V	
2393	4822 124 40433	47µF	20%	25V	
2394	4822 124 41525	100µF	20%	25V	
2395	4822 126 12882	100nF	20%	50V	
2396	4822 126 12882	100nF	20%	50V	
2550	4822 121 43856	4,7nF	5%	250V	for AZ1508 only
2551	4822 121 43856	4,7nF	5%	250V	for AZ1508 only
2552	4822 122 10466	220pF	10%		for AZ1508 only
2553	4822 122 10466	220pF	10%		for AZ1508 only
2554	4822 122 33848	47pF	5%	50V	for AZ1508 only
2555	4822 122 33848	47pF	5%	50V	for AZ1508 only
2560	4822 121 51379	82nF	10%	63V	for AZ1508 only
2561	4822 121 51379	82nF	10%	63V	for AZ1508 only
2562	4822 121 41857	10nF	5%	250V	for AZ1508 only
2563	4822 121 41857	10nF	5%	250V	for AZ1508 only
2564	4822 124 40433	47µF	20%	25V	for AZ1508 only
2565	4822 124 40246	4,7µF	20%	63V	for AZ1508 only
2566	4822 124 40246	4,7µF	20%	63V	for AZ1508 only
2567	4822 122 33848	47pF	5%	50V	for AZ1508 only
2568	4822 122 33848	47pF	5%	50V	for AZ1508 only
2569	4822 122 33848	47pF	5%	50V	for AZ1508 only
2570	4822 122 33848	47pF	5%	50V	for AZ1508 only
2571	4822 126 12339	2,2nF	10%	16V	for AZ1508 only
2572	4822 126 12339	2,2nF	10%	16V	for AZ1508 only

RESISTORS

3250	4822 116 52224	470Ω	5%	0,5W	
3251	4822 116 52256	2,2kΩ	5%	0,16W	
3252	4822 116 52256	2,2kΩ	5%	0,16W	
3253	4822 050 18208	8,2Ω	1%	0,4W	
3254	4822 050 18208	8,2Ω	1%	0,4W	
3255	4822 050 18208	8,2Ω	1%	0,4W	
3256	4822 050 11002	1kΩ	5%	0,2W	
3257	4822 116 52219	330Ω	5%	0,5W	
3258	4822 116 52283	4,7kΩ	5%	0,5W	
3259	4822 116 52283	4,7kΩ	5%	0,5W	
3260	4822 116 52256	2,2kΩ	5%	0,16W	
3261	4822 116 52256	2,2kΩ	5%	0,16W	
3267	4822 116 52283	4,7kΩ	5%	0,5W	
3269	4822 116 83864	10kΩ	5%	0,5W	for AZ1508 only
3270	4822 116 52252	180kΩ	5%	0,5W	
3271	4822 116 52297	68kΩ	5%	0,5W	
3272	4822 116 52297	68kΩ	5%	0,5W	
3273	4822 116 52252	180kΩ	5%	0,5W	
3274	4822 116 52244	15kΩ	5%	0,5W	
3275	4822 116 52244	15kΩ	5%	0,5W	

ELECTRICAL PARTSLIST

AUDIO BOARD

RESISTORS

3276	4822 116 52284	47kΩ	5%	0,5W	
3277	4822 116 52284	47kΩ	5%	0,5W	
3278	4822 116 52257	22kΩ	5%	0,5W	
3279	4822 116 52257	22kΩ	5%	0,5W	
3280	4822 116 52239	120kΩ	5%	0,5W	
3281	4822 116 52239	120kΩ	5%	0,5W	
3282	4822 116 52264	27kΩ	5%	0,5W	
3283	4822 116 52264	27kΩ	5%	0,5W	
3284	4822 116 83874	220kΩ	5%	0,5W	
3285	4822 116 83874	220kΩ	5%	0,5W	
3286	4822 116 52224	470Ω	5%	0,5W	
3287	4822 116 52224	470Ω	5%	0,5W	
3288	4822 116 52256	2,2kΩ	5%	0,16W	
3289	4822 116 52256	2,2kΩ	5%	0,16W	
3292	4822 116 52224	470Ω	5%	0,5W	
3293	4822 116 52257	22kΩ	5%	0,5W	
3294	4822 116 52285	470kΩ	5%	0,5W	
3295	4822 116 52257	22kΩ	5%	0,5W	
3296	4822 116 52224	470Ω	5%	0,5W	
3297	4822 116 52234	100kΩ	5%	0,5W	
3298	4822 116 52234	100kΩ	5%	0,5W	
3299	4822 116 52184	18Ω	5%	0,5W	for AZ1508 only
3300	4822 116 52245	150kΩ	5%	0,16W	
3301	4822 116 52234	100kΩ	5%	0,5W	
3302	4822 116 52284	47kΩ	5%	0,5W	
3303	4822 116 52249	1,8kΩ	5%	0,16W	
3304	4822 116 52256	2,2kΩ	5%	0,16W	
3305	4822 116 52256	2,2kΩ	5%	0,16W	
3306	4822 116 52263	2,7kΩ	5%	0,5W	
3307	4822 116 52263	2,7kΩ	5%	0,5W	
3308	4822 116 52226	560Ω	5%	0,5W	
3310	4822 116 52224	470Ω	5%	0,5W	
3311	4822 116 52224	470Ω	5%	0,5W	
3312	4822 116 52244	15kΩ	5%	0,5W	
3313	4822 116 52244	15kΩ	5%	0,5W	
3314	4822 116 52269	3,3kΩ	5%	0,5W	
3315	4822 116 52269	3,3kΩ	5%	0,5W	
3316	4822 116 83864	10kΩ	5%	0,5W	
3317	4822 116 83864	10kΩ	5%	0,5W	
3318	4822 052 10478 ⚠	4,7Ω	5%	NFR	
3320	4822 116 52175	100Ω	5%	0,5W	
3321	4822 116 52175	100Ω	5%	0,5W	
3322	4822 116 52224	470Ω	5%	0,5W	
3323	4822 116 52224	470Ω	5%	0,5W	
3326	4822 116 52224	470Ω	5%	0,5W	
3327	4822 116 52224	470Ω	5%	0,5W	
3328	4822 116 52213	180Ω	5%	0,5W	
3330	4822 116 52224	470Ω	5%	0,5W	
3331	4822 116 52224	470Ω	5%	0,5W	for AZ1407 only
3332	4822 050 11002	1kΩ	5%	0,2W	for AZ1508 only
3332	4822 116 52206	120Ω	5%	0,5W	for AZ1407 only
3333	4822 116 52206	120Ω	5%	0,5W	for AZ1407 only
3334	4822 052 10109 ⚠	10Ω	5%	0,33W	
3335	4822 116 52206	120Ω	5%	0,5W	for AZ1508 only
3337	4822 116 83872	220Ω	5%	0,5W	
3338	4822 116 83872	220Ω	5%	0,5W	
3340	4822 116 52224	470Ω	5%	0,5W	for AZ1508 only
3341	4822 050 11002	1kΩ	5%	0,2W	for AZ1508 only
3342	4822 116 52206	120Ω	5%	0,5W	for AZ1508 only
3344	4822 116 52224	470Ω	5%	0,5W	
3345	4822 116 52224	470Ω	5%	0,5W	
3346	4822 116 83872	220Ω	5%	0,5W	
3347	4822 116 83872	220Ω	5%	0,5W	
3350	4822 116 52271	33kΩ	5%	0,16W	

RESISTORS

3351	4822 116 52271	33kΩ	5%	0,16W	
3354	4822 116 52175	100Ω	5%	0,5W	
3355	4822 116 52175	100Ω	5%	0,5W	
3356	4822 116 52271	33kΩ	5%	0,16W	
3357	4822 116 52271	33kΩ	5%	0,16W	
3358	4822 116 52244	15kΩ	5%	0,5W	
3359	4822 116 52244	15kΩ	5%	0,5W	
3360	4822 116 52284	47kΩ	5%	0,5W	
3361	4822 116 52257	22kΩ	5%	0,5W	
3362	4822 116 52257	22kΩ	5%	0,5W	
3364	4822 116 52291	56kΩ	5%	0,5W	
3365	4822 116 52291	56kΩ	5%	0,5W	
3380	4822 116 83868	150Ω	5%	0,5W	
3381	4822 116 52256	2,2kΩ	5%	0,16W	
3382	4822 116 52256	2,2kΩ	5%	0,16W	
3383	4822 116 52234	100kΩ	5%	0,5W	
3384	4822 116 52235	1MΩ	5%	0,5W	
3385	4822 116 52285	470kΩ	5%	0,5W	
3386	4822 116 52283	4,7kΩ	5%	0,5W	
3387	4822 050 11002	1kΩ	5%	0,2W	
3388	4822 116 52257	22kΩ	5%	0,5W	
3389	4822 116 83864	10kΩ	5%	0,5W	
3390	4822 116 83864	10kΩ	5%	0,5W	
3391	4822 116 83864	10kΩ	5%	0,5W	
3392	4822 116 83864	10kΩ	5%	0,5W	
3393	4822 116 52256	2,2kΩ	5%	0,16W	for AZ1407 only
3394	4822 116 52256	2,2kΩ	5%	0,16W	for AZ1407 only
3395	4822 116 52184	18Ω	5%	0,5W	for AZ1508 only
3396	4822 116 52176	10Ω	5%	0,5W	
3397	4822 116 52224	470Ω	5%	0,5W	
3398	4822 116 52257	22kΩ	5%	0,5W	
3550	4822 116 52234	100kΩ	5%	0,5W	for AZ1508 only
3551	4822 116 52234	100kΩ	5%	0,5W	for AZ1508 only
3552	4822 116 52234	100kΩ	5%	0,5W	for AZ1508 only
3553	4822 116 52234	100kΩ	5%	0,5W	for AZ1508 only
3554	4822 116 83878	270kΩ	5%	0,5W	for AZ1508 only
3555	4822 116 83878	270kΩ	5%	0,5W	for AZ1508 only
3556	4822 116 52234	100kΩ	5%	0,5W	for AZ1508 only
3557	4822 116 52234	100kΩ	5%	0,5W	for AZ1508 only
3558	4822 116 52284	47kΩ	5%	0,5W	for AZ1508 only
3559	4822 116 52284	47kΩ	5%	0,5W	for AZ1508 only
3560	4822 116 52291	56kΩ	5%	0,5W	for AZ1508 only
3561	4822 116 52291	56kΩ	5%	0,5W	for AZ1508 only
3562	4822 116 52234	100kΩ	5%	0,5W	for AZ1508 only
3562	4822 116 52245	150kΩ	5%	0,5W	layout stage .5 onwards
3563	4822 116 52234	100kΩ	5%	0,5W	for AZ1508 only
3563	4822 116 52245	150kΩ	5%	0,5W	layout stage .5 onwards
3564	4822 116 52234	100kΩ	5%	0,5W	for AZ1508 only
3565	4822 116 52234	100kΩ	5%	0,5W	for AZ1508 only
3566	4822 116 52283	4,7kΩ	5%	0,5W	
3567	4822 116 52283	4,7kΩ	5%	0,5W	
3568	4822 116 52284	47kΩ	5%	0,5W	layout stage .4 only
3569	4822 116 52284	47kΩ	5%	0,5W	layout stage .4 only
3570	4822 116 52234	100kΩ	5%	0,5W	for AZ1508 only
3571	4822 116 52234	100kΩ	5%	0,5W	for AZ1508 only
3572	4822 116 52256	2,2kΩ	5%	0,16W	for AZ1508 only
3573	4822 116 52256	2,2kΩ	5%	0,16W	for AZ1508 only
3574	4822 116 52222	390Ω	5%	0,16W	for AZ1508 only
3575	4822 116 52222	390Ω	5%	0,16W	for AZ1508 only
3576	4822 116 52283	4,7kΩ	5%	0,5W	for AZ1508 only
3577	4822 116 52283	4,7kΩ	5%	0,5W	for AZ1508 only
3580	4822 116 83864	10kΩ	5%	0,5W	for AZ1508 only
3581	4822 116 83864	10kΩ	5%	0,5W	for AZ1508 only
3582	4822 050 11002	1kΩ	5%	0,2W	for AZ1508 only

ELECTRICAL PARTSLIST

AUDIO BOARD

RESISTORS

3583	4822 050 11002	1kΩ	5%	0,2W	for AZ1508 only
3584	4822 116 52283	4,7kΩ	5%	0,5W	for AZ1508 only
3585	4822 116 52283	4,7kΩ	5%	0,5W	for AZ1508 only
3586	4822 116 52249	1,8kΩ	5%	0,16W	for AZ1508 only
3587	4822 116 52249	1,8kΩ	5%	0,16W	for AZ1508 only
3588	4822 116 52304	82kΩ	5%	0,5W	for AZ1508 only
3589	4822 116 52304	82kΩ	5%	0,5W	for AZ1508 only

COILS

5250	4822 157 62552	2,2µH
5251	4822 157 62552	2,2µH
5252	4822 157 53302	1µH

DIODES

6250	5322 130 30684 ⚠	1N4002	for AZ1407 only
6250	5322 130 80686 ⚠	1N5392	for AZ1508 only
6251	5322 130 30684 ⚠	1N4002	for AZ1407 only
6251	5322 130 80686 ⚠	1N5392	for AZ1508 only
6252	5322 130 30684 ⚠	1N4002	for AZ1407 only
6252	5322 130 80686 ⚠	1N5392	for AZ1508 only
6253	5322 130 30684 ⚠	1N4002	for AZ1407 only
6253	5322 130 80686 ⚠	1N5392	for AZ1508 only
6254	5322 130 31504	BZX79-F3V3	
6255	4822 130 30621	1N4148	for AZ1508 only
6256	4822 130 30621	1N4148	for AZ1508 only
6257	4822 130 30621	1N4148	
6258	4822 130 30621	1N4148	
6259	4822 130 30621	1N4148	
6301	4822 130 30621	1N4148	
6350	4822 130 30621	1N4148	
6351	4822 130 30621	1N4148	
6380	4822 130 30621	1N4148	
6381	4822 130 30621	1N4148	
6382	4822 130 30621	1N4148	
6383	4822 130 34488	BZX79-C11V	
6384	4822 130 30621	1N4148	

TRANSISTORS

7250	5322 130 60068	BC558C	
7251	4822 130 44196	BC548C	
7252	4822 130 41327	BC327-40	
7253	4822 130 41327	BC327-40	
7254	4822 130 41327	BC327-40	
7255	4822 130 41327	BC327-40	
7256	4822 130 41327	BC327-40	
7262	4822 130 40937	BC548B	for AZ1508 only
7270	4822 130 44246	BC549C	
7271	4822 130 44246	BC549C	
7273	4822 130 40937	BC548B	
7274	4822 130 44196	BC548C	
7275	4822 130 44196	BC548C	
7300	4822 130 44196	BC548C	
7301	4822 130 61067	XN1401 (DOUBLE PNP)	
7302	4822 130 61067	XN1401 (DOUBLE PNP)	
7360	4822 130 40937	BC548B	
7380	4822 130 44197	BC558B	
7381	4822 130 44196	BC548C	
7382	4822 130 44196	BC548C	
7383	4822 130 44196	BC548C	
7384	4822 130 41327	BC327-40	

INTEGRATED CIRCUITS

7272	4822 209 32919	HEF4952BT	
7330	4822 209 31544	TA8227P, POWER STAGE	
7331	4822 209 31544	TA8227P, POWER STAGE	for AZ1508 only
7550	4822 209 63709	LM324D, 4-FOLD OPAMP.	for AZ1508 only
7551	5322 209 11102	HEF4052BT	for AZ1508 only

ELECTRICAL PARTSLIST

TUNER BOARD (ECO 5 PA FM/MW/SW-version)

CAPACITORS

2101©	5322 122 32531	100pF	5%	50V	
2102©	4822 122 33177	10nF	20%	50V	
2103©	5322 122 34123	1nF	10%	50V	
2104	4822 122 33195	100pF	10%	50V	
2106	4822 125 60101	3-11pF TRIMCAP			
2107	4822 121 51319	1µF	20%	50V	
2113©	5322 122 32448	10pF	5%	50V	
2114©	4822 122 33177	10nF	20%	50V	
2115	4822 125 50355	4,2-20pF TRIMCAP			
2116©	5322 122 34123	1nF	10%	50V	
2117©	4822 122 33177	10nF	20%	50V	
2118©	5322 122 32269	6,8pF	5%	50V	
2119©	4822 122 33891	3,3nF	10%	63V	
2120©	4822 126 13689	18pF	1%	63V	
2125	4822 121 51381	560pF	1%	400V	
2126©	5322 122 31863	330pF	5%	50V	
2127©	4822 122 32927	220nF	10%	63V	
2127©	4822 126 13473	220nF	20%	50V	
2128	4822 124 41579	10µF	20%	50V	
2129	4822 124 41584	100µF	20%	10V	
2130	4822 126 11585	22nF	20%	50V	
2131©	4822 122 33325	470nF	20%	50V	
2131©	4822 126 13482	470nF	20%	16V	
2132©	4822 122 33325	470nF	20%	50V	
2132©	4822 126 13482	470nF	20%	16V	
2133	4822 124 40242	1µF	20%	63V	
2134©	4822 122 33128	15nF	10%	63V	
2135	4822 124 40746	0,22µF	20%	63V	
2136©	4822 122 33128	15nF	10%	63V	
2137	4822 124 40746	0,22µF	20%	63V	
2138	4822 124 41576	2,2µF	20%	50V	
2139©	5322 122 32447	1pF	5%	50V	
2140	4822 121 51319	1µF	20%	50V	
2141©	4822 122 31947	100nF	20%	50V	
2141©	4822 126 10002	100nF	20%	50V	
2142©	4822 122 31947	100nF	20%	50V	
2142©	4822 126 10002	100nF	20%	50V	
2143©	4822 122 32927	220nF	10%	63V	
2143©	4822 126 13473	220nF	20%	50V	
2144	4822 124 40242	1µF	20%	63V	
2145©	4822 122 33575	220pF	5%	50V	
2146©	4822 122 33575	220pF	5%	50V	
2147©	4822 122 33575	220pF	5%	50V	
2148	4822 126 11585	22nF	20%	50V	
2149©	5322 122 32654	22nF	10%	63V	
2150©	4822 122 31947	100nF	20%	50V	
2152©	4822 122 33342	33nF	10%	63V	
2153©	5322 122 32481	15pF	5%	50V	
2155	4822 125 60101	3-11pF TRIMCAP			
2156©	4822 122 31947	100nF	20%	50V	
2156©	4822 126 10002	100nF	20%	50V	
2158©	5322 122 33538	150pF	5%	63V	
2159©	5322 122 32448	10pF	5%	50V	
2161©	4822 122 31947	100nF	20%	50V	
2161©	4822 126 10002	100nF	20%	50V	
2162	4822 122 33195	100pF	10%	50V	
2163©	4822 122 31947	100nF	20%	50V	
2163©	4822 126 10002	100nF	20%	50V	
2164©	4822 126 13482	470nF	20%	16V	
2164©	4822 126 13836	1µF	20%	16V	
2165©	4822 122 31947	100nF	20%	50V	
2165©	4822 126 10002	100nF	20%	50V	

RESISTORS

2166©	5322 122 34123	1nF	10%	50V	
2167©	4822 122 32139	12pF	5%	63V	
3101©	4822 051 20333	33kΩ	5%	0,1W	
3102©	4822 051 20104	100kΩ	5%	0,1W	
3103©	4822 051 20183	18kΩ	5%	0,1W	
3104©	4822 117 11448	180Ω	10%	0,1W	
3105	4822 116 83872	220Ω	5%	0,5W	
3106©	4822 117 10833	10kΩ	1%	0,1W	
3110	4822 116 52195	47Ω	5%	0,5W	
3114©	4822 051 20333	33kΩ	5%	0,1W	
3115©	4822 117 11503	220Ω	5%	0,1W	
3116©	4822 051 20184	180kΩ	5%	0,1W	
3117©	4822 051 20822	8,2kΩ	5%	0,1W	
3118©	4822 051 20104	100kΩ	5%	0,1W	
3120©	4822 117 11449	2,2kΩ	1%	0,1W	
3121©	4822 051 20479	47Ω	5%	0,1W	
3122©	4822 117 11449	2,2kΩ	1%	0,1W	
3123©	4822 051 20472	4,7kΩ	5%	0,1W	
3125©	4822 117 10833	10kΩ	1%	0,1W	
3126©	4822 117 10833	10kΩ	1%	0,1W	
3127©	4822 051 20223	22kΩ	5%	0,1W	
3132	4822 116 52195	47Ω	5%	0,5W	
3133©	4822 117 10833	10kΩ	1%	0,1W	
3134©	4822 051 20224	220kΩ	5%	0,1W	
3136©	4822 117 11449	2,2kΩ	1%	0,1W	
3140©	4822 051 20008	CHIP JUMPER 0805			5120=CDA10.7MG40K
3140©	4822 117 10353	150Ω	5%	0,1W	5120=CDA10.7MG61KA
3141©	4822 051 20563	56kΩ	5%	0,1W	
3142	4822 100 11163	100kΩ TRIMPOT LIN.			
3145©	4822 117 11449	2,2kΩ	1%	0,1W	
3146©	4822 051 20229	22Ω	5%	0,1W	
3152	4822 116 83883	470Ω	5%	0,16W	
3153©	4822 051 20471	470Ω	5%	0,1W	
3154	4822 116 52206	120Ω	5%	0,5W	
3155©	4822 051 20229	22Ω	5%	0,1W	
3156©	4822 051 20104	100kΩ	5%	0,1W	
3158	4822 116 83883	470Ω	5%	0,16W	
3159	4822 116 83883	470Ω	5%	0,16W	
3160	4822 116 83883	470Ω	5%	0,16W	
3161	4822 116 83883	470Ω	5%	0,16W	
3167©	4822 051 20121	120Ω	5%	0,1W	
3168©	4822 117 10353	150Ω	5%	0,1W	
3169©	4822 051 20154	150kΩ	5%	0,1W	
3173	4822 116 52219	330Ω	5%	0,5W	
4101©	4822 051 20008	CHIP JUMPER 0805			
4102©	4822 051 20008	CHIP JUMPER 0805			
4103©	4822 051 20008	CHIP JUMPER 0805			
4104©	4822 051 20008	CHIP JUMPER 0805			
4105©	4822 051 20008	CHIP JUMPER 0805			
4107©	4822 051 20008	CHIP JUMPER 0805			
4109©	4822 051 20008	CHIP JUMPER 0805			
4110©	4822 051 10008	CHIP JUMPER 1206			
4111©	4822 051 20008	CHIP JUMPER 0805			
4120©	4822 051 20008	CHIP JUMPER 0805			
4150©	4822 051 10008	CHIP JUMPER 1206			
4151©	4822 051 20008	CHIP JUMPER 0805			
4152©	4822 051 10008	CHIP JUMPER 1206			
4153©	4822 051 10008	CHIP JUMPER 1206			
4154©	4822 051 10008	CHIP JUMPER 1206			
4155©	4822 051 10008	CHIP JUMPER 1206			
4156©	4822 051 20008	CHIP JUMPER 0805			
4157©	4822 051 10008	CHIP JUMPER 1206			

ELECTRICAL PARTSLIST

TUNER BOARD (ECO 5 PA FM/MW/SW-version)

RESISTORS

4158©	4822 051 10008	CHIP JUMPER 1206
4159©	4822 051 10008	CHIP JUMPER 1206
4163©	4822 051 20008	CHIP JUMPER 0805

COILS

5102	4822 157 71634	RF-COIL MW
5104	4822 157 71128	RF-COIL SW
5105	4822 157 71129	RF-COIL SW
5106	4822 157 53302	1µH
5109	4822 242 70665	CER. FILTER 10,7MHZ
5110	4822 242 70665	CER. FILTER 10,7MHZ
5111	4822 158 60511	AM-IF FILTER 450kHz
5112	4822 157 70302	AM-IF FILTER 450kHz
5114	4822 157 70302	AM-IF FILTER 450kHz (AM AFC)
5120	4822 242 10251	CERAMIC FILTER 10.7MG61KA-TF21
5120	4822 242 82065	CER. DISCRIMINATOR 10.7MG40K
5121	4822 242 10261	QUARTZ 75kHz
5123	4822 157 60517	OSC. COIL MW
5124	4822 157 71127	OSC. COIL SW
5126	4822 157 52333	100µH
5127	4822 157 62552	2,2µH
5130	4822 156 30947	RF COIL 1,5 TURNS
5131	4822 156 30947	RF COIL 1,5 TURNS

DIODES

6102	4822 130 32214	BA484
6103	4822 130 30621	1N4148
6104	4822 130 30621	1N4148
6106	4822 130 30621	1N4148
6107	4822 130 34488	BZX79-C11
6109	4822 130 30621	1N4148
6110©	4822 130 83145	HN2V02H-B, TUNING DIODE
6130©	4822 130 82833	1SV228
6131©	4822 130 82833	1SV228

TRANSISTORS

7102	4822 130 60093	2SA838B
7106©	5322 130 42136	BC848C
7107	4822 130 60093	2SA838B
7109©	5322 130 41983	BC858B
7111©	5322 130 42136	BC848C
7120©	5322 130 42136	BC848C
7121©	5322 130 42136	BC848C
7123©	5322 130 42136	BC848C

INTEGRATED CIRCUITS

7101©	4822 209 90924	TEA5757H/V1, RADIO IC

SURVEY OF CHANGES OF SERVICE MANUAL

4822 725 24975 - AZ1407, AZ1508

Added pages introduced with Service Information A97-352:

Description	Page/Chapter	Reason
ECO5 tuner board	7-2-1	Layout stage 3380.1 added and corrected adjustment table published
	7-3, 7-4, 12-7, 12-8	Schematic Diagram, Component layout, Adjustment Table and Partslist of Shortwave-version added for AZ1508/11.
Changes	13-1	Survey of changes added

* **From production week 9703 onwards layout of the printed circuit board has been changed to layout stage 3103 303 3380.1**
(The layout stage can be identified by the last digit of the 12-figure number, printed in the copper pattern)
attention: code number 3103 303 **3317**.7 of copper pattern exchanged by new code number 3103 303 **3380**.1
→ the change status begins therefore with **.1** again.

reason: - IF- buffer-amplifier added (provisional for Japanese version only)

- SMDs type 1206 changed to smaller SMD type 0805

2127 ©	220nF	+80/-20%	50V	4822 126 13473
2131 ©	470nF	+80/-20%	16V	4822 126 13482
2132 ©	470nF	+80/-20%	16V	4822 126 13482
2141 ©	100nF	20%	25V	4822 126 10002
2142 ©	100nF	20%	25V	4822 126 10002
2143 ©	220nF	+80/-20%	50V	4822 126 13473
2161 ©	100nF	20%	25V	4822 126 10002
2163 ©	100nF	20%	25V	4822 126 10002
2165 ©	100nF	20%	25V	4822 126 10002

2140 replaced by 2164 SMD type 0805 (see picture 1)

2164 ©	470nF	+80/-20%	16V	4822 126 13482

For the new assembly drawing see attached sheet 7-2-1.

* **Adjustment table**

Varicap-voltage for 1602kHz was changed to 6,9V±0,5V for FM/MW-versions.
reason: correction

For the new adjustment table see attached sheet 7-2-1 .

RECORDER BOARD

* **From production week 9638 onwards 2715, 2722, 2732 and 2733 have been changed:**

2715 changed from 22nF to 4822 126 13174 33nF 30% 50V
2722 changed from 22nF to 4822 126 13174 33nF 30% 50V
reason:reduction of ALC distortion with high signal level.

2732 changed from 3,3nF to 4822 126 11714 4,7nF 20% 50V
reason: increase of bias-amplitude.

2733 changed to Polcap-type 4822 121 43144 22nF 10% 50V
reason: improvement of bias-modulation at high temperatures.

CD Stereo Radio Recorder

AZ1407, AZ1508

A97-352

Service
Service
Service

Product Service Group CE Audio

Service Information

Already published Service Informations: ***none***

CORRECTIONS TO THE SERVICE MANUAL

ECO5 TUNER - BOARD

* **Schematic Diagram, chapter 7-1:**

Reference texts "to/from ..." at connectors read correct:
1126: to/from Front Board 1490
1122: to/from Audio Board 1262

MECHANICAL PARTSLIST

* **Correct code number for "mains socket IEC" is:**
1000 ▲ 4822 265 20318 mains socket IEC

* **Correct code number for "voltage selector" is:**
1370 ▲ 4822 277 11575 voltage selector

NEW VERSION

The new version **AZ1508/11** was introduced.

Except for the tuner board AZ1508/11 is equal to AZ1508/01.

In AZ1508/11 the Shortwave-version (FM/MW/SW) of the ECO5 tuner-board is used.

For Schematic Diagram, Assembly Drawing and Adjustment Table see attached sheets 7-3 and 7-4.
(sheet 7-4 shows the Assembly Drawing with the newest layout stage 3380.**1**. In case a set is equipped with a tuner-board with layout stage 3317.**7**, use Assembly Drawing published in the service manual)

For Partslist see attached sheet 12-7.

CHANGES IN COURSE OF PRODUCTION

FRONT - BOARD

*** To optimize supply voltage of display for best contrast, 3459 was changed to 1,5kΩ.**

3459 © 1,5kΩ 1% 0,1W 4822 117 11139

*** From production week 9704 onwards layout of the printed circuit board has been changed to layout stage .5**
(The layout stage can be identified by the last digit of the 12-figure number, printed in the copper pattern)

reason: pitch of LED 6416 was changed to 2,5mm. As a consequence 3416 had to be moved and 7416 rotated by 180° .

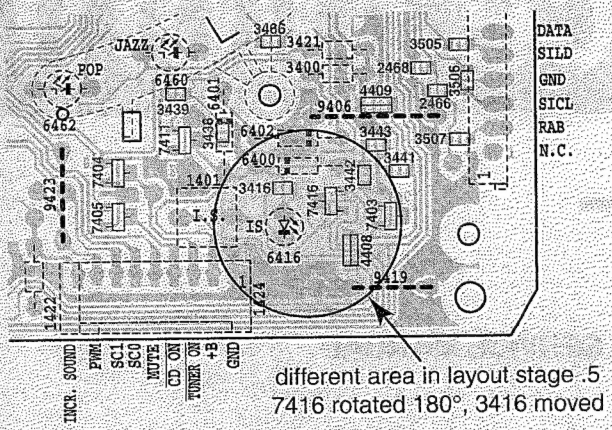

picture 1

ECO5 TUNER - BOARD

*** To improve locking accuracy after switching FM-mode on when the desired transmitter is disturbed, 3101 was changed to 33kΩ.**

3101 © 33kΩ 5% 0,1W 4822 051 20333

*** To improve locking accuracy after search mode, 2139 was added in parallel to discriminator 5120.**

2139 © 1pF 20% 50V 5322 122 32447

remark: component was already implemented in the layout. Assembly is dependent on tolerance of IC7101.

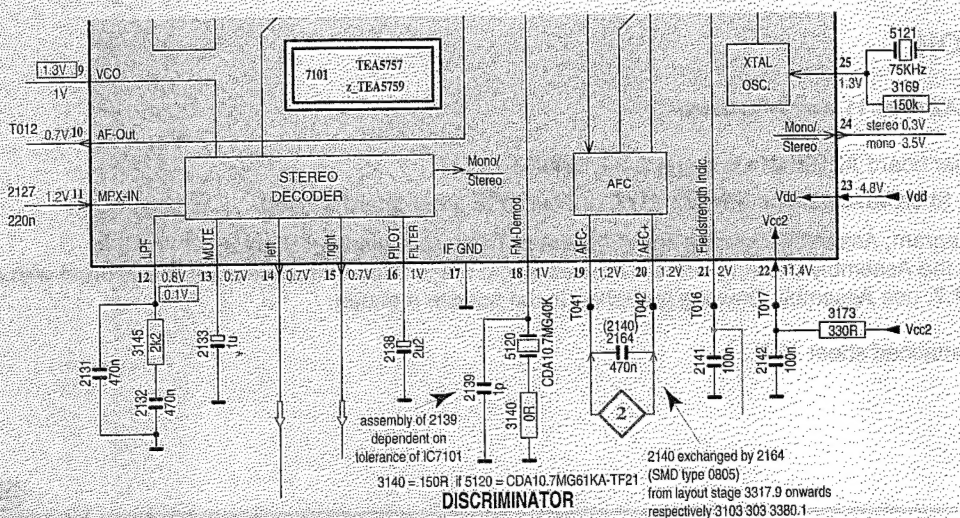

picture 2

CD Stereo Radio Recorder

AZ1508

A97-572

5028

Service
Service
Service

Product Service Group CE Audio

Service Information

Already published Service Information : ***A97-352 (4822 725 26014)***

A new version AZ1508/10 has been introduced.

For repair information we refer to Service Manual **AZ1508/00** - 4822 725 24975.

AZ1508/10 is identical to the AZ1508/01 except the following changes :.

	SERVICE CODE	ARTICLE DESCRIPTION
409	4822 321 10954	MAINS CORD AUS.